Turn off the wheelchair if it is to stand unused for an extended period. It must not be disconnected on a sloping surface as it may roll. Take care on slippery or uneven surfaces.Take care when using in traffic and never let anyone stand or sit on the chair with you.

Lowering the seat back

The seat back may be lowered so that the wheelchair takes up less space during transportation.

1. Remove back cushion; this is fastened with velcro.
2. Remove back cover; loosen the screw with 5mm Allen key, remove screw.
3. Lay chassis down; it is fastened with clip and can be easily taken off/put on.

Height when back is down: ca. 75 cm.

Securing wheelchair in a car

Ensure that the wheelchair is always secured during transportation. Always ensure that the attaching equipment you are using is approved for car transportation.

For fixing during transportation, the rings on the wheelchair should be used as fastening points for straps.

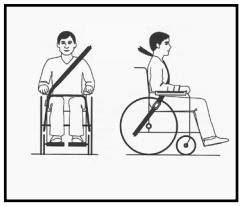

MAKE SURE YOU ALWAYS USE THE ORIGINAL FIXING EQUIPMENT, IN ADDITION TO THE EQUIPMENT THAT HAS BEEN MOUNTED ON THE CHAIR.

MAKE SURE THAT ARMRESTS, WHEELS AND OTHER COMPONENTS DO NOT PREVENT BODY CONTACT. THERE MUST BE FULL BODY CONTACT WITH THE 3-POINT STRAP.

These guidelines cover Balder wheelchairs with standard equipment.

Etac AS
Gigstadsvei 22
N-3511 Hønefoss
www.etac.com

etac®
Creating Possibilities

ETAC Balder

etac®

Use and transport

12469 Manual, Use and transport for Balder, English
11.03.16

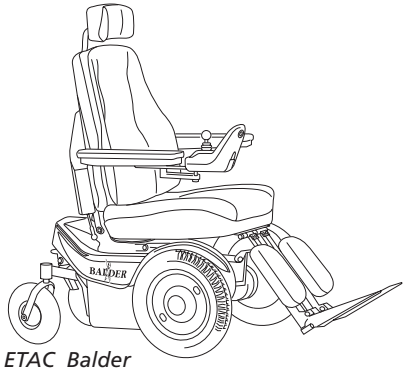

ETAC Balder

www.etac.com

Product information Balder Liberty, Finesse and Finesse stand

Label

Contact information

Contact your local dealer if you need help or guidance.

The chair's standard measurements and weight

The illustration shows the chair's standard measurements, including neck support. Weight 130 kg

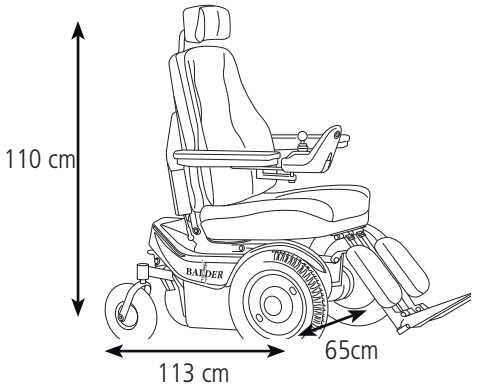

Disconnection/Operation

The drive motors may be disconnected so that the chair can be pushed without using the electronics. Use the levers marked Operation – Disconnected.

Put the levers into the Operation position to prevent the chair from moving during transportation. This must be done on a level surface and the chair must be turned off.

Batteries

We confirm that Balder electric wheelchairs are supplied from the factory with batteries. These are approved in accordance with International Air Transport Association (IATA): Packing

Instruction 806, Special Provision A67.

The batteries are marked with IATA labels.

If a situation should arise, however, when it is necessary to physically disconnect the power supply from the battery terminals, it is done like this:

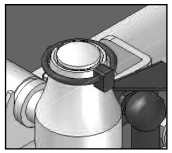

1. Drive the chair into the required position for transportation.
2. Turn off the chair.
3. Remove the locking pin so that the seat can be lifted. (See sketch)
4. Remove the cover.
5. Remove the battery shoes and isolate them so that they cannot come into physical contact with the battery terminals.
6. Place the battery shoes into the cavity behind the batteries.
7. Fit the cover.
8. Place the seat in the original position; put the locking pin in place on the lift motor.

Main circuit breaker

The main circuit breaker turns off power to the chair. If your wheelchair is fitted with a main circuit breaker, this will be found at the back of the wheelchair.

The power is turned of by turning the key counter-clockwise. The key may then be taken out and the power is now off.

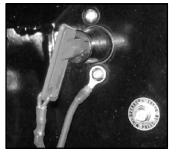

Turn the key clockwise to connect the current.The key is locked in this position and the power is connected.

How to drive the wheelchair

Turn on the wheelchair with the on-off switch on the joystick. Adjust the electric functions for optimum driving position. Move the joystick in the direction in which you wish the wheelchair to go. The speed of movement of the wheelchair will increase in proportion to your movement of the joystick. It has five different driving programmes which are selected with the blue programme selector. Prog. 1 is a slow driving programme which is suitable for beginners, as well as for driving indoors or in other restricted spaces. Prog. 5 is a programme for fast driving outdoors.

Fault indicators

A green lamp at the key symbol should be continuously lit. If the lamp blinks once, let the chair stand for 10 seconds before turning it off and then on again. If the lamp blinks twice at intervals, the speed limiter on the seat lift may be activated. This is not a fault but a safety measure. See user manual or contact your nearest dealer for further assistance.

Before you drive

Read the enclosed User Manual. Check that the disconnection levers on the drive motors of the wheelchair are set to the operating position. Turn on the wheelchair with the on-off switch on the panel. Sit in the wheelchair and regulate the functions which can be regulated manually. For example: Armrests, footrests etc.Regulate the electrical functions for optimum seating comfort.

Important information

Read the user manual before using for the first time.Because of the wheelchair's complex construction there may be a risk of getting fingers etc. caught in the event of unintentional use.