Exploded views

01. Basic parts

02. Functions

03. Steering system and remotes

04. Wheels

05. Seating unit

06. Headrest

07. Armrest

08. Footrest

09. Accessories

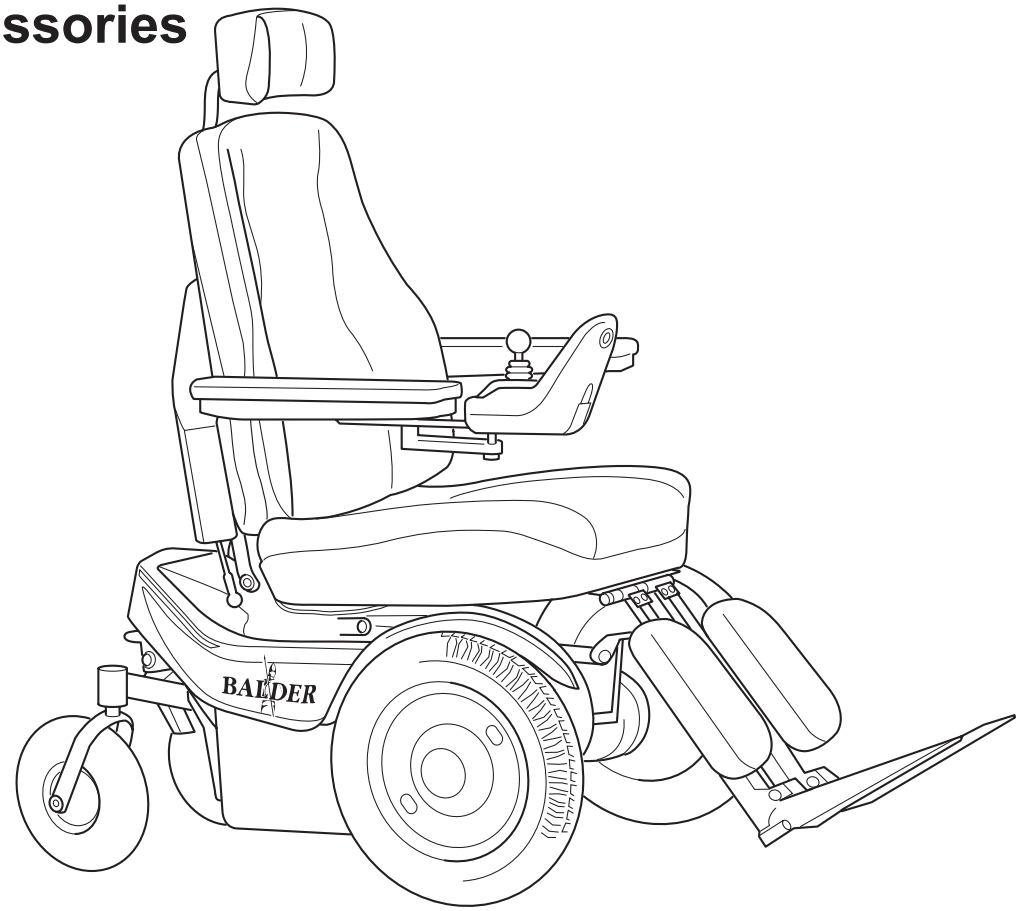

01. Basic parts

Product name:	**Compl. Wiringset w/switches F/L/J, tiltfunction**
Product no:	**11607**
Product reference:	**Balder F/L/J**
Manufacturer:	Etac AS, www.etac.com
Revision:	**01.01.07**

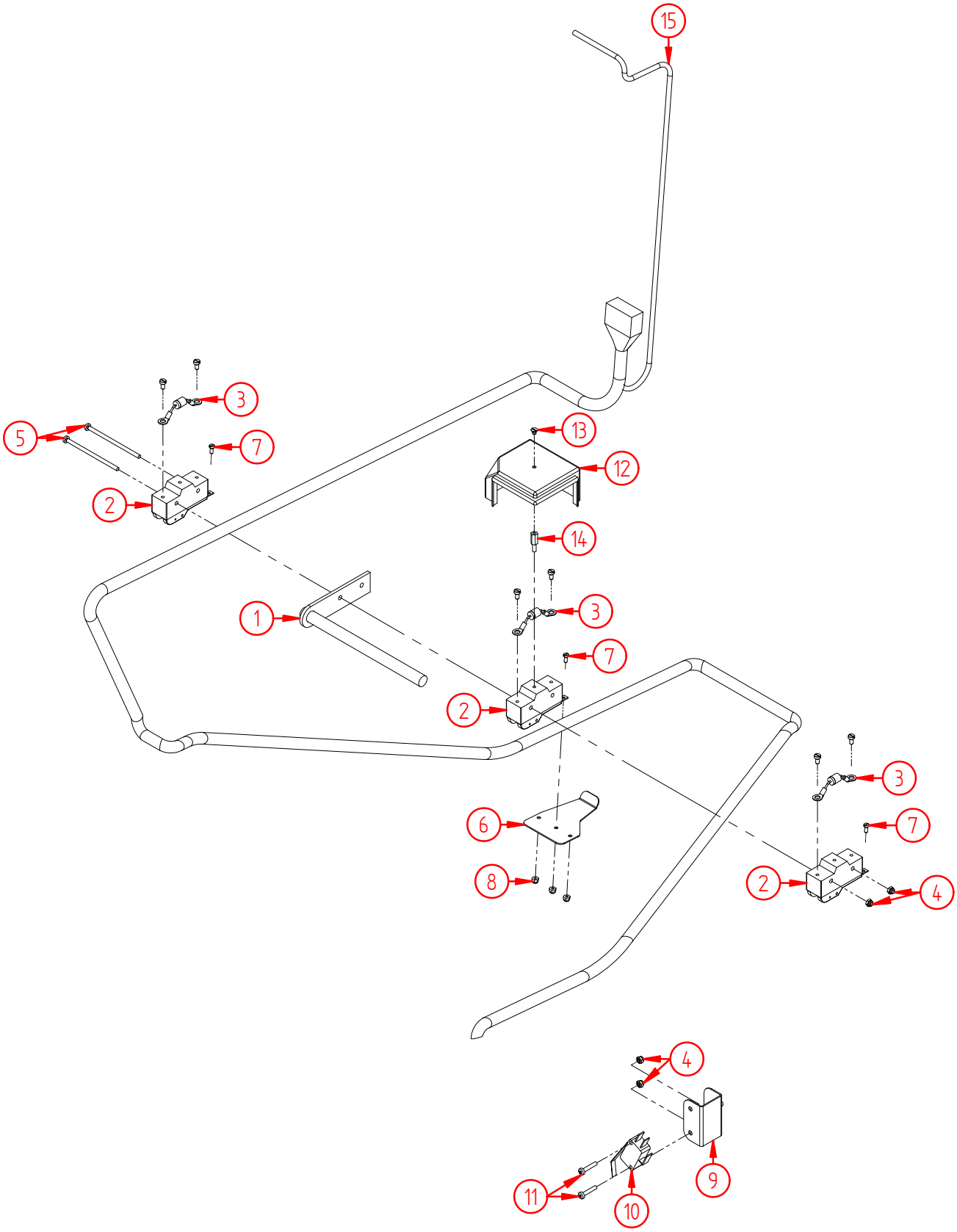

Product name:	**Compl. Wiringset w/switches F/L/J, tiltfunction**
Product no:	**11607**
Product reference:	**Balder F/L/J**
Manufacturer:	Etac AS, www.etac.com
Revision:	**01.01.07**

Pos no.	Part no.	Qty	Description
1	1074	1	Bracket for the limit switch
2	1098	3	Switch, function limiter tilt, seatback, lift F/L/J
3	8625	3	Diode, complete for tilt switch F/L
4	1188	4	Nut, nylock M3 DIN 985 Elzink 8,8
5	1203	2	Screw, star M3x60 DIN 7985
6	1193	1	Plate for the end limit switch
7	1202	3	Screw M2,5x6, straight track DIN 84
8	1187	3	Nut, nylock M2,5 DIN 985 Elzink 8,8
9	1073	1	Bracket for speed control switch
10	10272	1	Microswitch, speedreduction F/L/J
11	1353	2	Screw, cross slotted, pan head M3x16 DIN 7985 Elzink
12	9426	1	Cover, tiltswitch
13	4622	1	Screw, slotted, countersunk M3x4 DIN 963 Elzink
14	9427	1	Spacer, plasticUNC 6,32x10
15	1354	1	Wiring Balder F/L/J, tiltfunction

Part no.	Qty	Description
.	.	.
.	.	.
.	.	.
.	.	.

Product name:	**Compl. Wiringset w/switches F/J, stand-up function**
Product no:	**11608**
Product reference:	**Balder F/J**
Manufacturer:	Etac AS, www.etac.com
Revision:	**01.01.07**

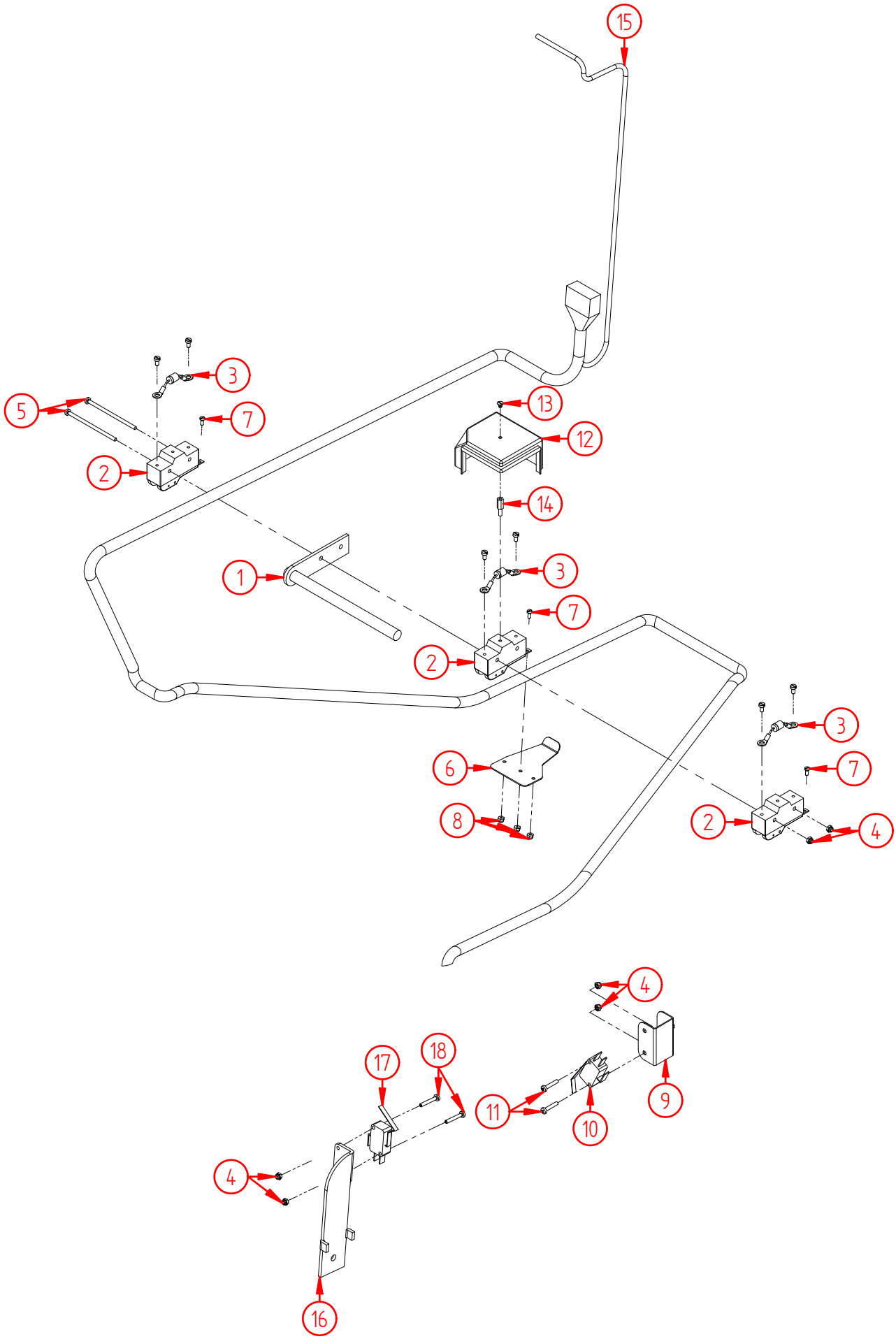

Product name:	**Compl. Wiringset w/switches F/J, stand-up function**
Product no:	**11608**
Product reference:	**Balder F/J**
Manufacturer:	Etac AS, www.etac.com
Revision:	**01.01.07**

Pos no.	Part no.	Qty	Description
1	1074	1	Bracket for the limit switch
2	1098	3	Switch, function limiter tilt, seatback, lift F/L/J
3	8625	3	Diode, complete for tilt switch F/L
4	1188	6	Nut, nylock M3 DIN 985 Elzink 8,8
5	1203	2	Screw, star M3x60 DIN 7985
6	1193	1	Plate for the end limit switch
7	1202	3	Screw M2,5x6, straight track DIN 84
8	1187	3	Nut, nylock M2,5 DIN 985 Elzink 8,8
9	1073	1	Bracket for speed control switch
10	10272	1	Microswitch, speedreduction F/L/J
11	1353	2	Screw, cross slotted, pan head M3x16 DIN 7985 Elzink
12	9426	1	Cover, tiltswitch
13	4622	1	Screw, slotted, countersunk M3x4 DIN 963 Elzink
14	9427	1	Spacer, plasticUNC 6,32x10
15	9547	1	Wiring Balder F/L/J, tiltfunction
16	9566	1	Bracket, microswitch, gashock, standup funct.
17	10273	1	Microswitch, seatliftposition, stand-up function
18	9558	2	Screw, cross slotted, pan head M3x20 DIN 7985 Elzink

Part no.	Qty	Description
.	.	.
.	.	.
.	.	.
.	.	.

Product name:	**Chassis Balder F w/ seat lift actuator**
Product no:	**HP20071000**
Product reference:	**Balder F**
Manufacturer:	Etac AS, www.etac.com
Revision:	**25.06.10**

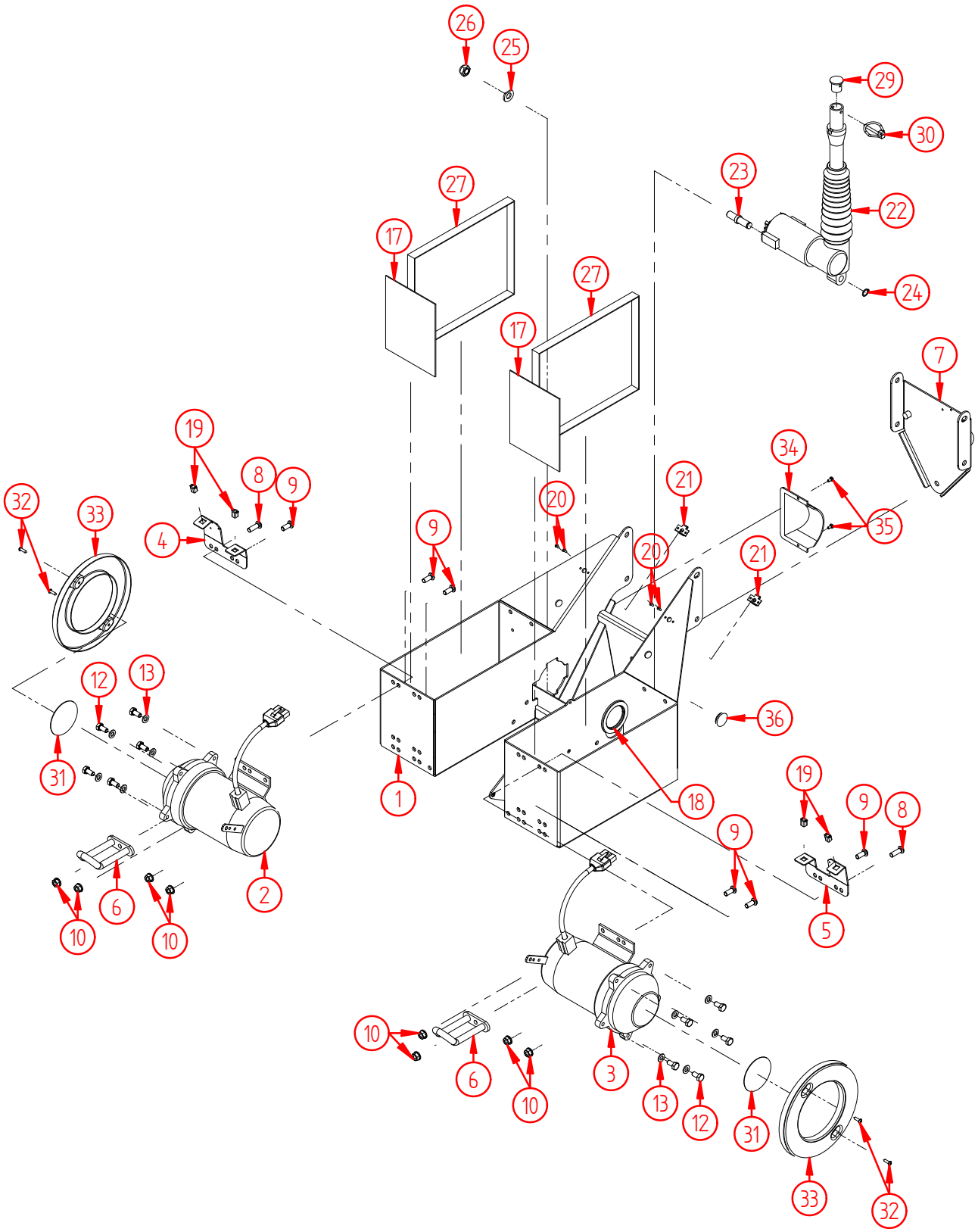

Product name:	**Chassis Balder F w/ seat lift actuator**
Product no:	**HP20071000**
Product reference:	**Balder F**
Manufacturer:	Etac AS, www.etac.com
Revision:	**25.06.10**

Pos no.	Part no.	Qty	Description
1	1001	1	Chassis, balder F (NOT A SALESARTICLE)
2	1005	1	Driving motor (from chnr 04072207) (F/J; Right L; Left)
3	1004	1	Driving motor (from chno 04072207) (F/J;Left L;Right)
4	10722	1	Bracket, bodymoulding F/J, RH, for dzus
5	10721	1	Bracket, bodymoulding F/J, LH, for dzus
6	1009	2	Fixing bar in front, black
7	1003	1	Rearplate, chassis, black
8	1124	2	Screw, hexagon socket pan head M8x25 DIN 7380 Elzink 8,8
9	1008	6	Screw, hexagon socket pan head M8x20 DIN 7380 Elzink 8,8
10	1126	8	Nut, tensilock M8 DIN 6923 Goldfinish 8,8
12	2777	10	Screw, hexagon headed M8x16 DIN 933 El.zink 8,8
13	1340	10	Washer M8 DIN 125 Elzink
17	1035	2	Protectionsheet for the battery 13x16 plastic
18	9530	1	Rubber bushing 68x60x2,5 with membrane
19	10700	4	Receiver, dzus square, quarter-turn
20	10723	4	Pop rivet 3,2x8mm, alu, DIN 7337
21	10701	2	Receiver, dzus for pop rivet, quarter-turn
22	1034	1	Actuator for the seatlift, w/rubber shield and lifting sleeve
23	1036	1	Axle-Lifting motor
24	1043	1	Circlip Ø12, outside DIN 471 Unplated
25	9679	1	Washer, special for bolt liftactuator F/L
26	1047	1	Nut, nylock M12 DIN 985 El.zink 8,8
27	4275	2	Battery strap for battery F/L
29	9820	1	Stopsleeve, liftsleeve F/L
30	445218	1	Locking pin 4,8x42, el.zink
31	9790	2	Label, Balder F/J, hub
32	1116-6	4	Plate screw w/washer M4,2x16 DIN 7981 Black
33	1274	2	Hubcap Balder F/L/J
34	1234	1	Cover over the lifting motor Balder F/J
35	1220	2	Screw, hexagon M4x8, selfthreading Elzink
36	12871	1	Plateplug B30/25/5

Part no.	Qty	Description
.	.	Alternatives:
2370	1	Rubber bushing 30,6x25,4x3,2
10253	1	Driving motor (to chno 04062206) (F/J;Left L;Right)
10254	1	Driving motor (to chnr 04062206) (F/J; Right L; Left)
1164	1	Bracket, bodymoulding F/J, RH, for screw
1165	1	Bracket, bodymoulding F/J, LH, for screw

Product name:	**Chassis Balder L w/ seat lift actuator**
Product no:	**HP20071001**
Product reference:	**Balder L**
Manufacturer:	Etac AS, www.etac.com
Revision:	**25.06.10**

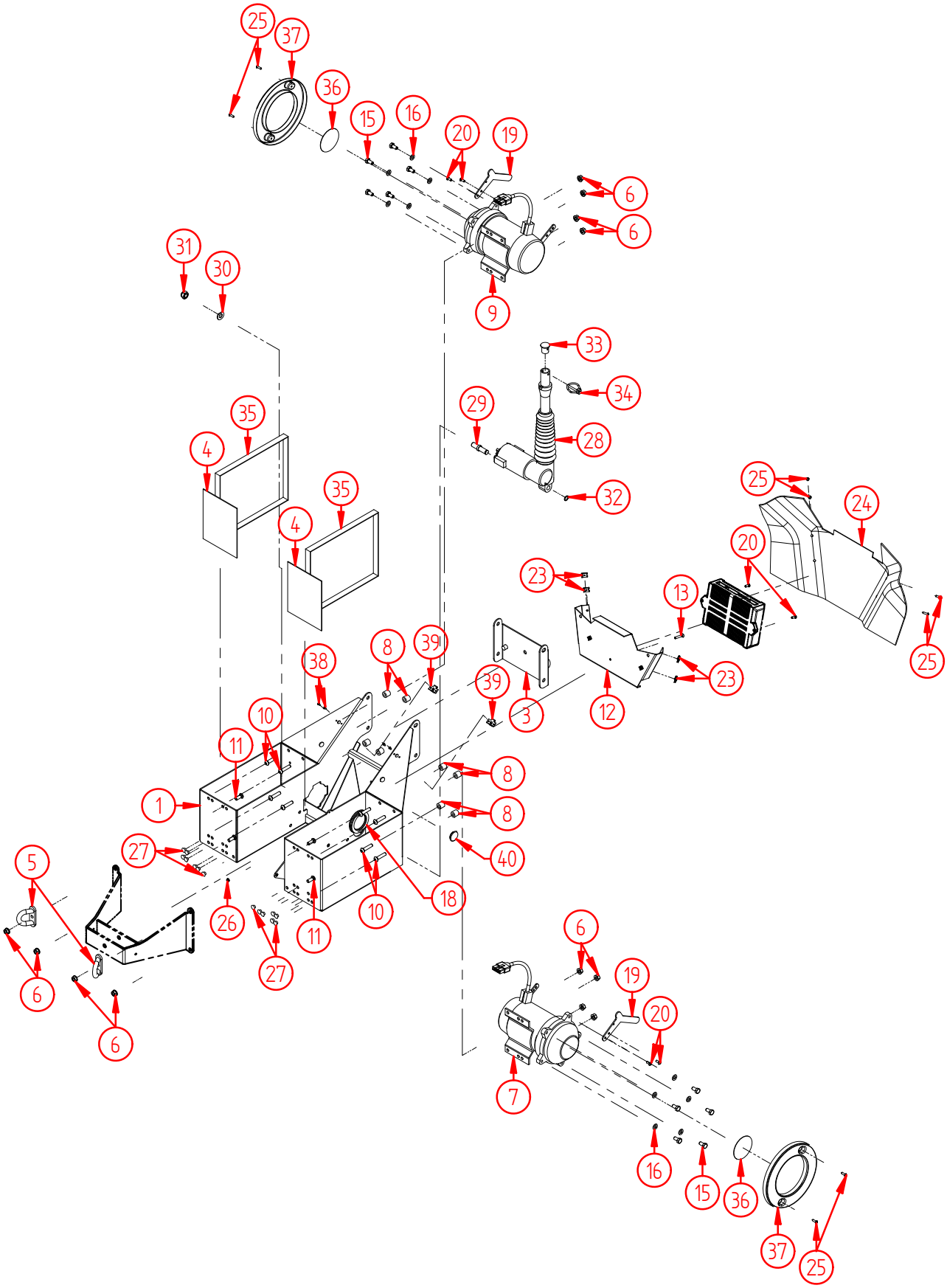

Product name:	**Chassis Balder L w/ seat lift actuator**
Product no:	**HP20071001**
Product reference:	**Balder L**
Manufacturer:	Etac AS, www.etac.com
Revision:	**25.06.10**

Pos no.	Part no.	Qty	Description
1	1001	1	Chassis, black (NOT A SALESARTICLE)
3	4467	1	Rearplate, chassis L
4	1035	2	Protectionsheet for the battery 13x16 plastic
5	4471	2	Catch for chassis L
6	1126	12	Nut, tensilock M8 DIN 6923 Goldfinish 8,8
7	1005	1	Driving motor (from chnr 04072207) (F/J; Right L; Left)
8	4470	8	Sleeve for driving motor L:15mm
9	1004	1	Driving motor (from chno 04072207) (F/J;Left L;Right)
10	4468	8	Screw, hexagon socket pan head M8x35 DIN 7380 Elzink 8,8
11	1008	4	Screw, hexagon socket pan head M8x20 DIN 7380 Elzink 8,8
12	4473	1	Bracket for electronics L
13	4656	1	Allen screw, countersunk M5x30 DIN 7991 Elzink 8,8
15	2777	10	Screw, hexagon headed M8x16 DIN 933 El.zink 8,8
16	1340	10	Washer M8 DIN 125 Elzink
18	9530	1	Rubber bushing 68x60x2,5 with membrane
19	4658	2	Release lever for driving motor L
20	1208	6	Screw, hexagon socket pan head M5x12 ISO7380 Elzink 10,9
23	1344	4	Nut clip 4,2 mm
24	4576	1	Cover for electronics L
25	1116-6	8	Plate screw w/washer M4,2x16 DIN 7981 Black
26	1190	1	Nut, nylock M5 DIN 985 Elzink 8,8
27	4669	14	Plate plug B13/8/6.3
28	1034	1	Actuator for the seatlift, w/rubber shield and lifting sleeve
29	1036	1	Axle-Lifting motor
30	9679	1	Washer, special for bolt liftactuator F/L
31	1047	1	Nut, nylock M12 DIN 985 El.zink 8,8
32	1043	1	Circlip Ø12, outside DIN 471 Unplated
33	9820	1	Stopsleeve, liftsleeve F/L
34	445218	1	Locking pin 4,8x42, el.zink
35	4275	2	Battery strap for battery F/L
36	9790	2	Label, Balder F/J, hub
37	1274	2	Hubcap Balder F/L/J
38	10723	4	Pop rivet 3,2x8mm, alu, DIN 7337
39	10701	2	Receiver, dzus for pop rivet, quarter-turn
40	12871	1	Plateplug B30/25/5

Part no.	Qty	Description
.	.	Alternatives:
2370	1	Rubber bushing 30,6x25,4x3,2
10253	1	Driving motor (to chno 04062206) (F/J;Left L;Right)
10254	1	Driving motor (to chnr 04062206) (F/J; Right L; Left)

Product name:	**Chassis Balder J w/ seat lift actuator**
Product no:	**HP20071002**
Product reference:	**Balder J**
Manufacturer:	Etac AS, www.etac.com
Revision:	**25.06.10**

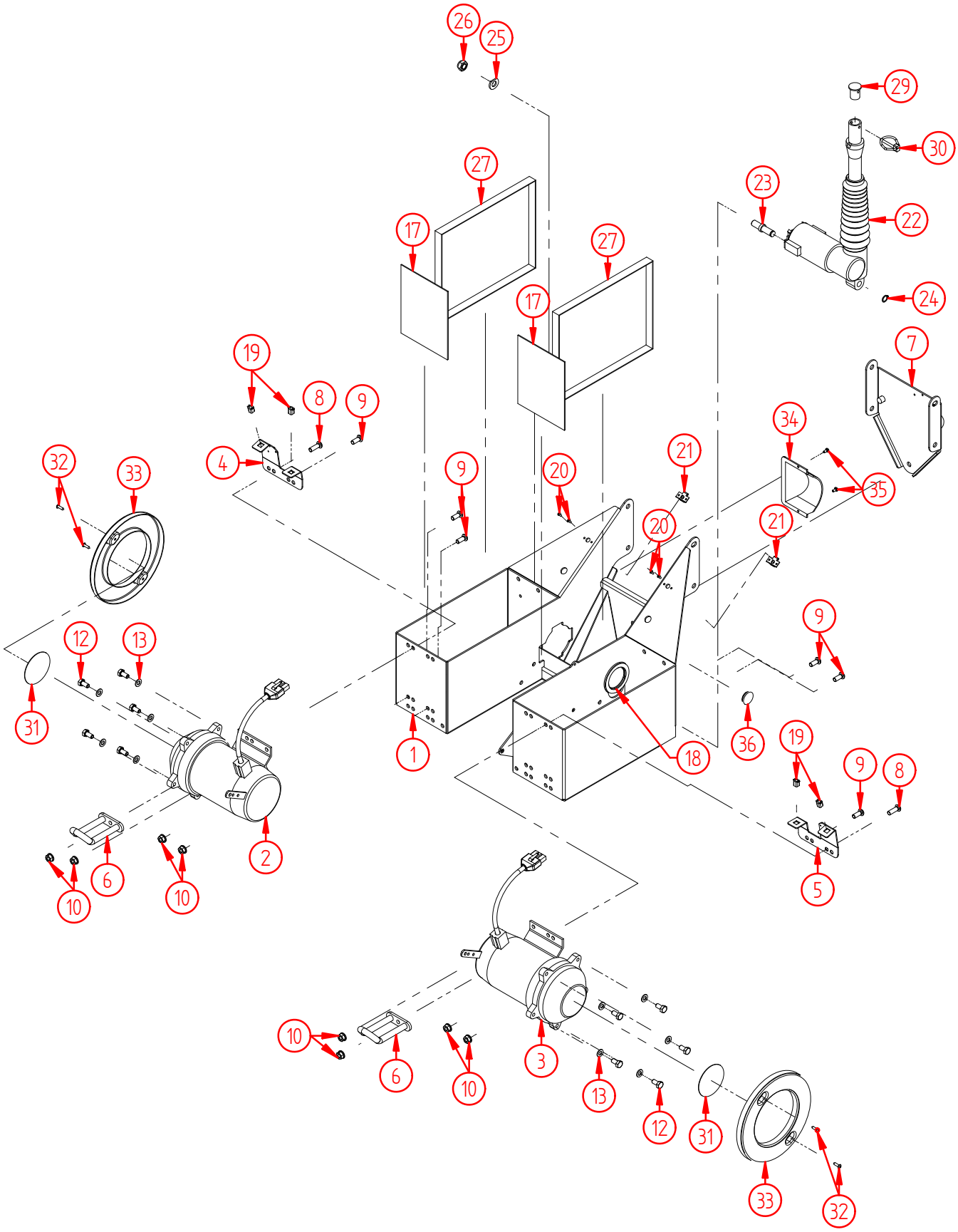

Product name:	**Chassis Balder J w/ seat lift actuator**
Product no:	**HP20071002**
Product reference:	**Balder J**
Manufacturer:	Etac AS, www.etac.com
Revision:	**25.06.10**

Pos no.	Part no.	Qty	Description
1	1001	1	Chassis, black (NOT A SALESARTICLE)
2	1005	1	Driving motor (from chnr 04072207) (F/J; Right L; Left)
3	1004	1	Driving motor (from chno 04072207) (F/J;Left L;Right)
4	10722	1	Bracket, bodymoulding F/J, RH, for dzus
5	10721	1	Bracket, bodymoulding F/J, LH, for dzus
6	1009	2	Fixing bar in front, black
7	1003	1	Rearplate, chassis, black
8	1124	2	Screw, hexagon socket pan head M8x25 DIN 7380 Elzink 8,8
9	1008	6	Screw, hexagon socket pan head M8x20 DIN 7380 Elzink 8,8
10	1126	8	Nut, tensilock M8 DIN 6923 Goldfinish 8,8
12	2777	10	Screw, hexagon headed M8x16 DIN 933 El.zink 8,8
13	1340	10	Washer M8 DIN 125 Elzink
17	1035	2	Protectionsheet for the battery 13x16 plastic
18	9530	1	Rubber bushing 68x60x2,5 with membrane
19	10700	4	Receiver, dzus square, quarter-turn
20	10723	4	Pop rivet 3,2x8mm, alu, DIN 7337
21	10701	2	Receiver, dzus for pop rivet, quarter-turn
22	1034	1	Actuator for the seatlift, w/rubber shield and lifting sleeve
23	1036	1	Axle-Lifting motor
24	1043	1	Circlip Ø12, outside DIN 471 Unplated
25	9679	1	Washer, special for bolt liftactuator F/L
26	1047	1	Nut, nylock M12 DIN 985 El.zink 8,8
27	4275	2	Battery strap for battery F/L
29	9821	1	Stopsleeve, liftsleeve junior
30	445218	1	Locking pin 4,8x42, el.zink
31	9790	2	Label, Balder F/J, hub
32	1116-6	4	Plate screw w/washer M4,2x16 DIN 7981 Black
33	1274	2	Hubcap Balder F/L/J
34	1234	1	Cover over the lifting motor Balder F/J
35	1220	2	Screw, hexagon M4x8, selfthreading Elzink
36	12871	1	Plateplug B30/25/5

Part no.	Qty	Description
.	.	Alternatives:
2370	1	Rubber bushing 30,6x25,4x3,2
10253	1	Driving motor (to chno 04062206) (F/J;Left L;Right)
10254	1	Driving motor (to chnr 04062206) (F/J; Right L; Left)
1164	1	Bracket, bodymoulding F/J, RH, for screw
1165	1	Bracket, bodymoulding F/J, LH, for screw

Product name:	**Seat Lift Balder F/L/J ex. Seat lift actuator**
Product no:	**HP20071003**
Product reference:	**Balder F/L/J**
Manufacturer:	Etac AS, www.etac.com
Revision:	**29.08.08**

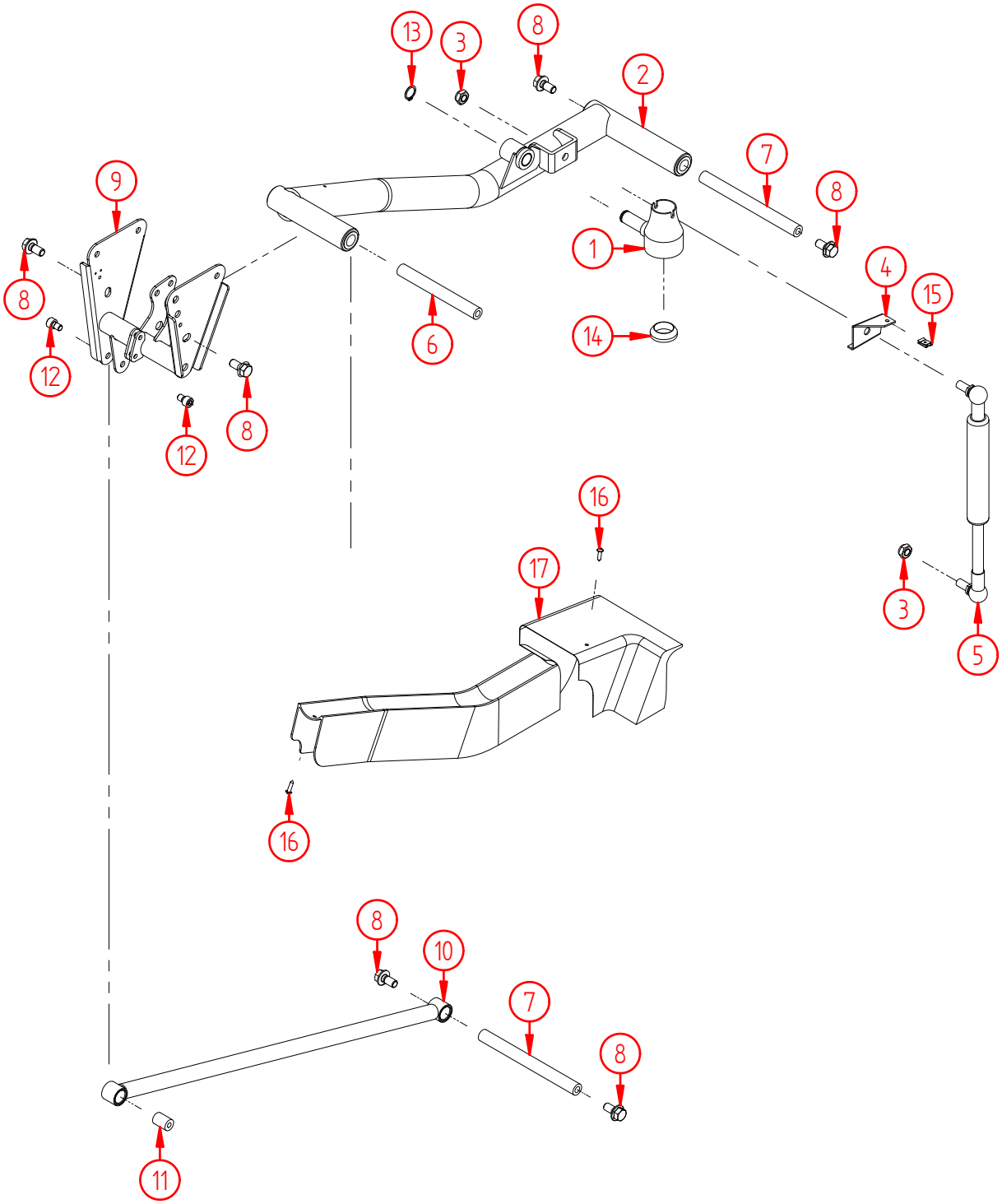

Product name:	**Seat Lift Balder F/L/J ex. Seat lift actuator**
Product no:	**HP20071003**
Product reference:	**Balder F/L/J**
Manufacturer:	Etac AS, www.etac.com
Revision:	**29.08.08**

Pos no.	Part no.	Qty	Description
1	1025	1	Lifting link
2	1011	1	Rocker arm
3	1186	2	Nut, nylock M10 DIN 985 Elzink 8,8
4	1072	1	Bracket for the gas shock cover
5	1320	1	Gas Shock for seatlift
6	1014	1	Axle rocker arm, in front
7	1019	2	Axle for lifting arm and tie rod, rear
8	1020	6	Screw, hexagon tensilock M10x20 DIN 6921 Goldfinish
9	1012	1	Lifting frame
10	1030	1	Tie rod
11	1016	1	Axle tie rod, in front
12	10751	2	Screw, hexagon socket M8x12 DIN 912 Elzink 8,8
13	1029	1	Circlip Ø16, outside DIN 471 Unplated
14	11213	1	Ballring, lift link
15	1344	1	Nut clip 4,2 mm
16	1116	2	Plate screw w/washer M4,2x16 DIN 7981 Black
17	1120	1	Cover for the rocker arm F/L/J

Part no.	Qty	Description
.	.	.
.	.	.
.	.	.
.	.	.

Product name:	**Seat frame, F/L/J**
Product no:	**20071004**
Product reference:	**Balder F/L/J**
Manufacturer:	Etac AS, www.etac.com
Revision:	**01.01.07**

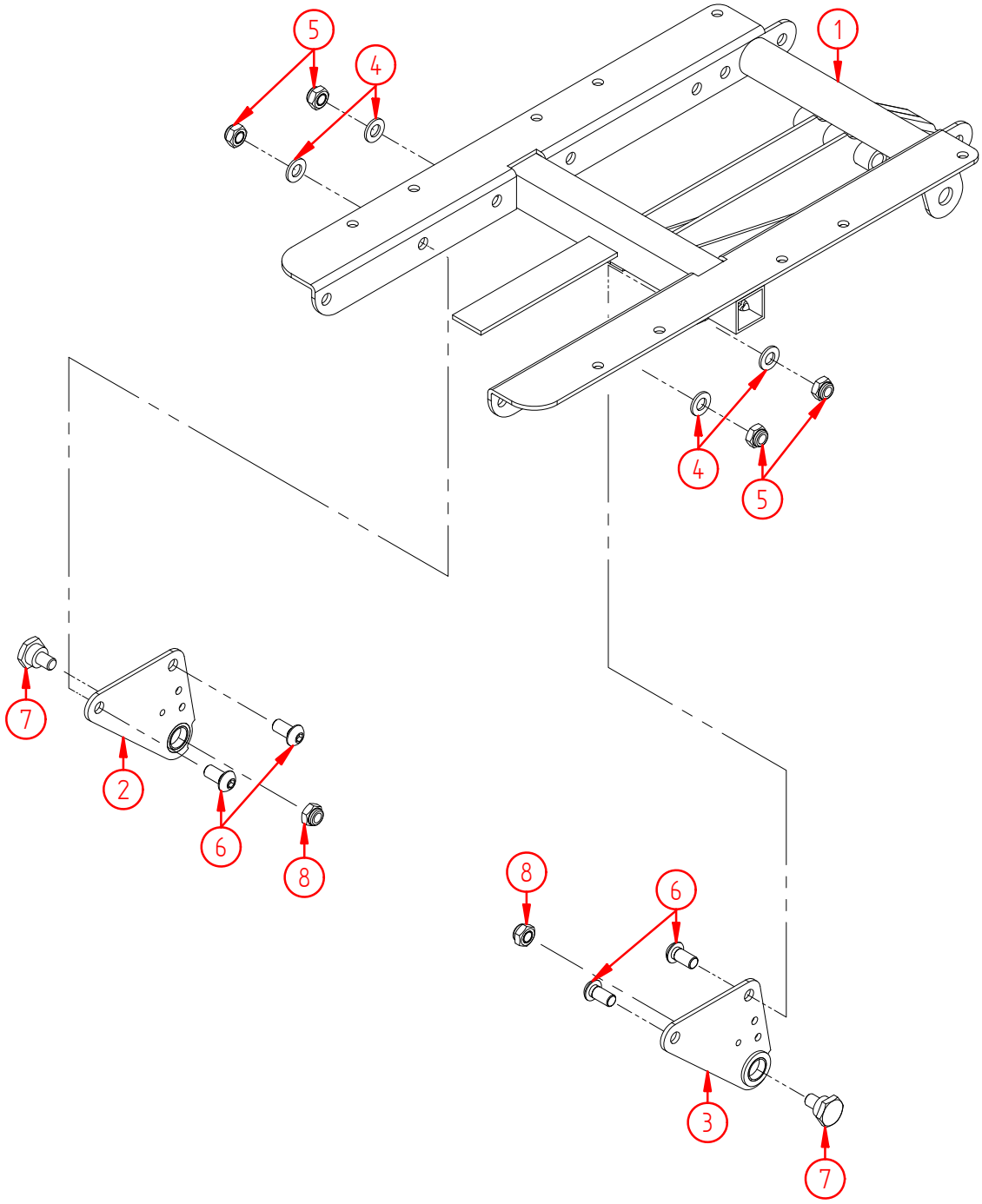

Product name:	**Seat frame, F/L/J**
Product no:	**20071004**
Product reference:	**Balder F/L/J**
Manufacturer:	Etac AS, www.etac.com
Revision:	**01.01.07**

Pos no.	Part no.	Qty	Description
1	1038	1	Seat Frame, F/L/J
2	9599	1	Bracket, rocker seatframe (tilt:R,stand-up:L)
3	9601	1	Bracket, rocker seatframe (tilt:L,stand-up:R)
4	1340	4	Washer M8 DIN 125 Elzink
5	1070	4	Nut, nylock M8 DIN 985 El.zink 8,8
6	1213	4	Screw, hexagon socket pan head M8x16 DIN 7380 Elzink 8,8
7	9602	2	Screw, special M8, rocker bracket, "from ch.no 03091800"
8	9598	2	Nut, M8, prevailing torque DIN 980

Part no.	Qty	Description
.	.	.
.	.	.
.	.	.
.	.	.

Product name:	**Rear carriage Balder F/J**
Product no:	**HP20071005**
Product reference:	**Balder F/J**
Manufacturer:	Etac AS, www.etac.com
Revision:	**29.08.08**

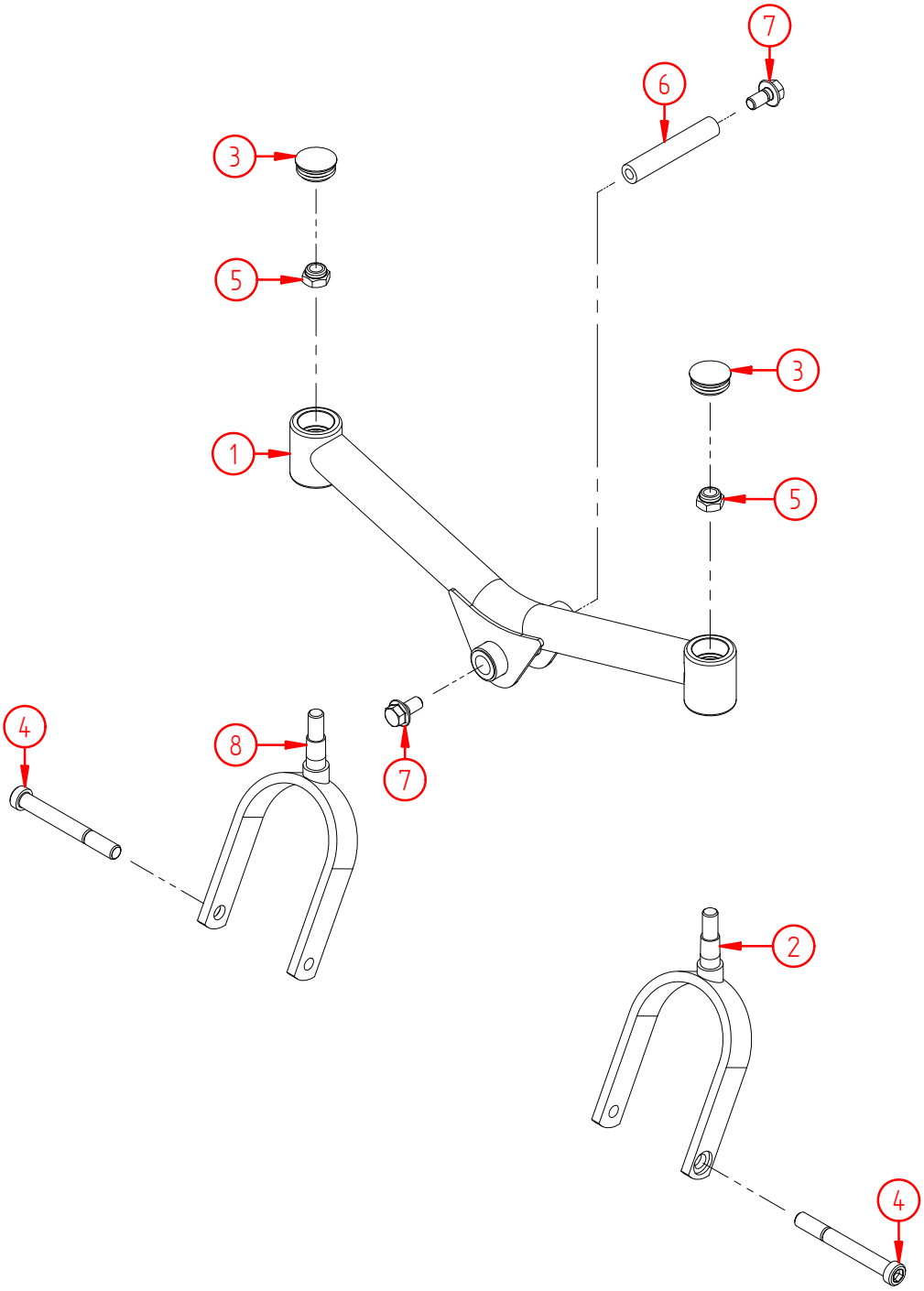

Product name:	**Rear carriage Balder F/J**
Product no:	**HP20071005**
Product reference:	**Balder F/J**
Manufacturer:	Etac AS, www.etac.com
Revision:	**29.08.08**

Pos no.	Part no.	Qty	Description
1	1048	1	Arm, rear carrige,black
2	1057	1	Castor Fork, RH, black
3	1046	2	Plastic pluq Dia. 32
4	1053	2	Screw, hexagon socket head cap M12x100 DIN 6912 Elzink 8,8
5	1047	2	Nut, nylock M12 DIN 985 El.zink 8,8
6	1054	1	Suspension axle, rear carriage F/J
7	1020	2	Screw, hexagon tensilock M10x20 DIN 6921 Goldfinish
8	1052	1	Castor Fork, L.H, black

Part no.	Qty	Description
.	.	.
.	.	.
.	.	.
.	.	.

Product name:	**Front carriage Balder L**
Product no:	**HP20071006**
Product reference:	**Balder L**
Manufacturer:	Etac AS, www.etac.com
Revision:	**29.08.08**

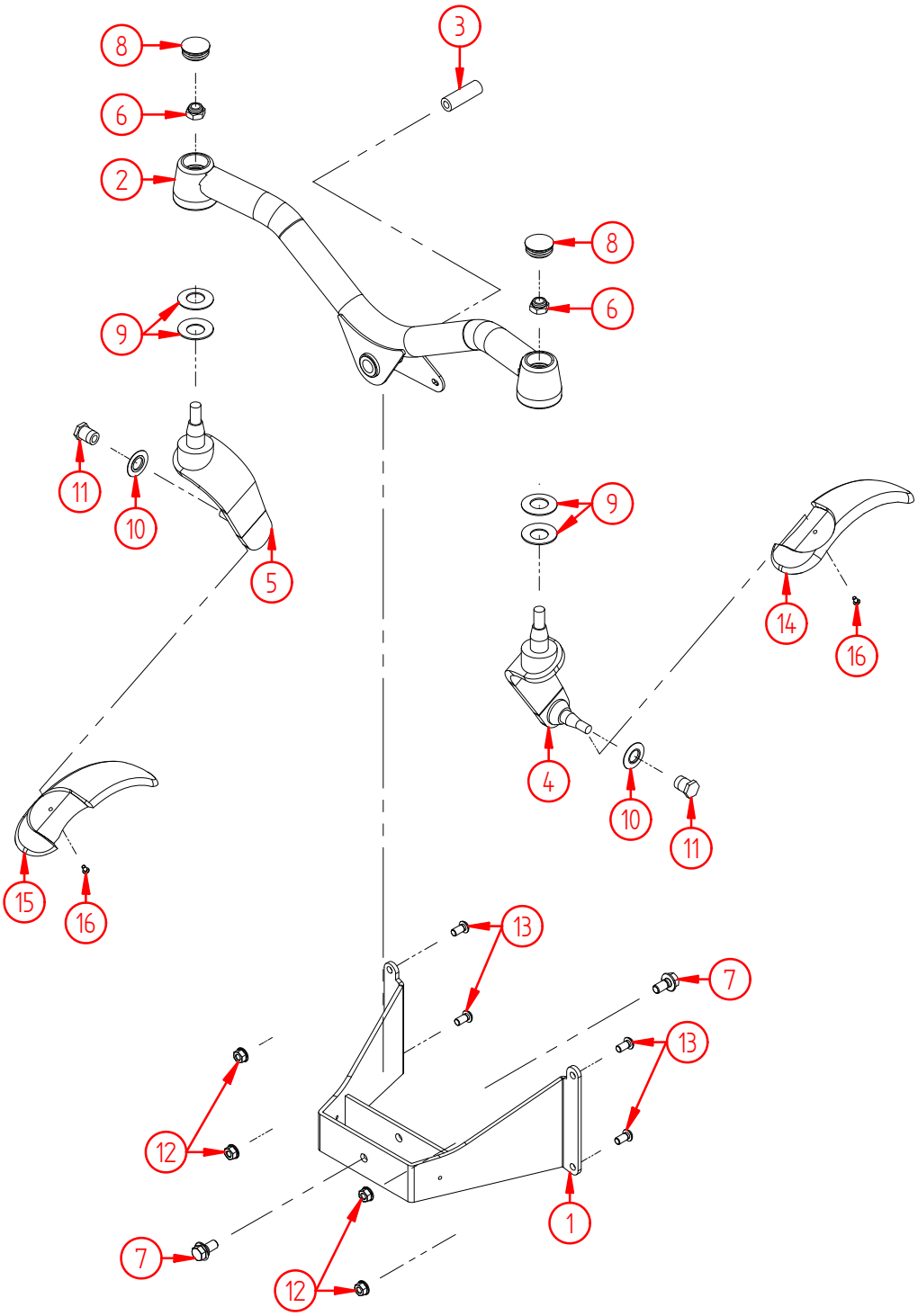

Product name:	**Front carriage Balder L**
Product no:	**HP20071006**
Product reference:	**Balder L**
Manufacturer:	Etac AS, www.etac.com
Revision:	**29.08.08**

Pos no.	Part no.	Qty	Description
1	4466	1	Bracket for front end assembly L
2	4460	1	Front end assembely arm L
3	4462	1	Axle, for front end assembely arm L
4	9827	1	Castor fork L,left (from ChNo L04022062)
5	9826	1	Castor fork L,right (from ChNo L04022062)
6	1047	2	Nut, nylock M12 DIN 985 El.zink 8,8
7	1020	2	Screw, hexagon tensilock M10x20 DIN 6921 Goldfinish
8	1046	2	Plastic pluq Dia. 32
9	8620	4	Cup spring 40x20,4x1,5
10	9828	2	Washer,castor fork L, (from Ch.No. L04022062)
11	9829	2	Wheelnut,castor fork L(from Chno. L04022062)
12	1126	4	Nut, tensilock M8 DIN 6923 Goldfinish 8,8
13	1213	4	Screw, hexagon socket pan head M8x16 DIN 7380 Elzink 8,8
14	9831	1	Cover left front wheel L (from Chno. L04022062)
15	9830	1	Cover right front wheel L (from Chno. L04022062)
16	9472	2	Screw, hexagon socket pan head M4x8 DIN 7380 Elzink 8,8

Part no.	Qty	Description
.	.	Alternativer:
4463	1	Castor Fork L, Right,(to Chno.L04022028)
4464	1	Castor fork L - left (to Chno.L04022028)
4465	2	Wheel nut for castor fork (to Chno. L04022028)
1235	1	Cover right front wheel L (to Chno. L04022028)
1236	1	Cover left front wheel L (to Ch.no. L04022028)

Product name:	**Back frame assembly Balder J**
Product no:	**20071007**
Product reference:	**Balder J**
Manufacturer:	Etac AS, www.etac.com
Revision:	**01.01.07**

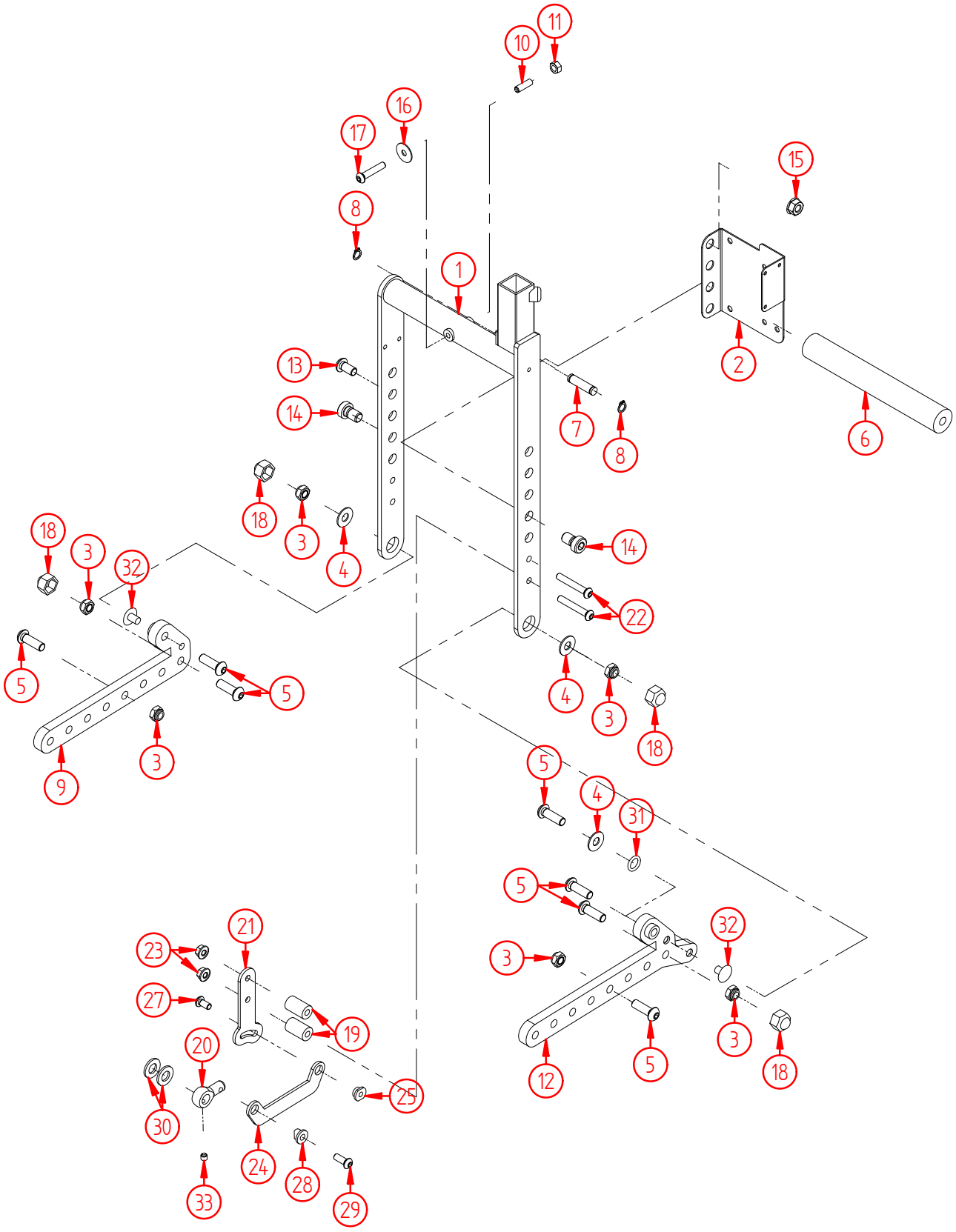

Product name:	**Back frame assembly Balder J**
Product no:	**20071007**
Product reference:	**Balder J**
Manufacturer:	Etac AS, www.etac.com
Revision:	**01.01.07**

Pos no.	Part no.	Qty	Description
1	10066	1	Back frame Junior 230/235
2	10067	1	Bracket for Clam unit Junior 230/235
3	1070	6	Nut, nylock M8 DIN 985 El.zink 8,8
4	1064	3	Washer M8x20 DIN 522 Elzink
5	1124	7	Screw, hexagon socket pan head M8x25 DIN 7380 Elzink 8,8
6	1063	1	Bar for back rest frame
7	10068	1	Axle seatback actuator, upper, F/L, Junior 240
8	1147	2	Circlip Ø8, outside DIN 471 Unplated
9	10069	1	Bracket, backframe RH, Junior 230/235
10	1096	1	Screw, hexagon set, M6x20 DIN 916 Unplated
11	1089	1	Nut M6 DIN 934 Elzink
12	10070	1	Bracket, backframe w/actuatorbolt LH, J 230/235
13	1213	1	Screw, hexagon socket pan head M8x16 DIN 7380 Elzink 8,8
14	4922	2	Screw, hexagon socket M10x16 DIN 912 Elzink 8,8
15	1126	1	Nut, tensilock M8 DIN 6923 Goldfinish 8,8
16	1338	1	Washer M6x20 DIN 522 Elzink
17	4404	1	Screw, hexagon socket pan head M6x30 DIN 7380 Elzink 8,8
18	3759	4	Nut cover BK13 M8
19	1176	2	Sleeve arm, upper
20	1022	1	Arm for the tilt switch, lower
21	10101	1	Arm for tilt switch, upper, Junior 230/235
22	9341	2	Screw, hexagon socket pan head M6x40 DIN 7380 Elzink 8,8
23	1039	2	Nut, tensilock M6 DIN 6923 Goldfinish 8,8
24	10100	1	Bar for the tilt switch, Junior 230/235
25	9608	1	Sleeve, tiltswitcharm, upper
26	1311	1	Washer M6 DIN 125 Elzink
27	1312	1	Screw, hexagon socket pan head M6x12 ISO7380 Elzink 10,9
28	9607	1	Sleeve, tiltswitcharm, lower "from chassisno 03091800"
29	1107	1	Screw, hexagon socket pan head M6x16 ISO7380 Elzink 10,9
30	2981	2	Washer M10 DIN 125 Elzink
31	9678	1	O-ring Ø11x2,5/nitril
32	9385	2	Plastic clip, Ford
33	4618	1	Screw, hexagon set, M6x6 DIN 916 Unplated

Part no.	Qty	Description
.	.	.
.	.	.
.	.	.
.	.	.

Product name:	**Back frame assembly Balder F/L/J240**
Product no:	**HP20071008**
Product reference:	**Balder F/L/J240**
Manufacturer:	Etac AS, www.etac.com
Revision:	**29.08.08**

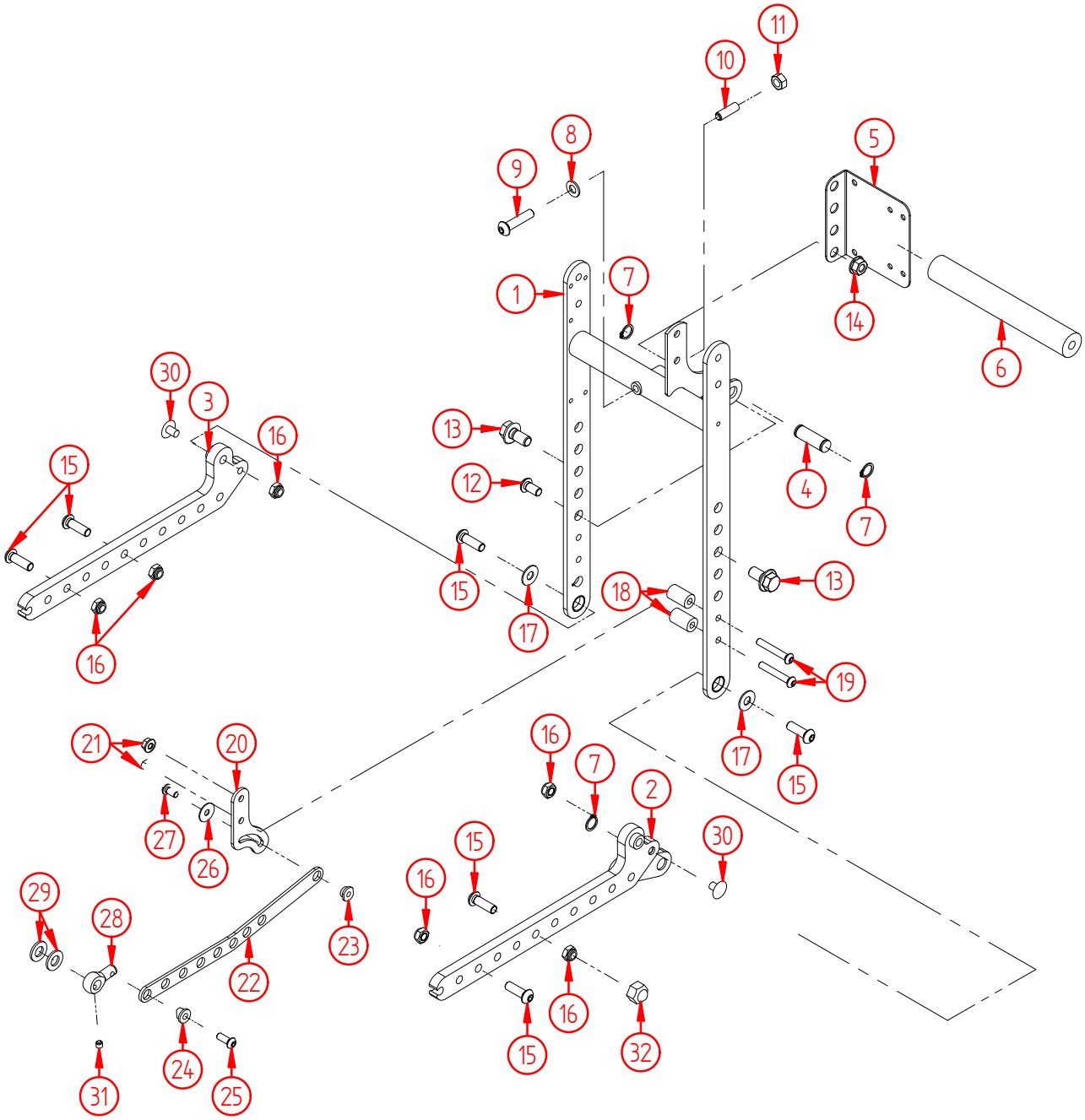

Product name:	**Back frame assembly Balder F/L/J240**
Product no:	**HP20071008**
Product reference:	**Balder F/L/J240**
Manufacturer:	Etac AS, www.etac.com
Revision:	**29.08.08**

Pos no.	Part no.	Qty	Description
1	1060	1	Back frame F/L, Junior 240
2	1067	1	Bracket, backframe w/actuatorbolt LH, F/L
3	1065	1	Bracket, backframe RH, F/L
4	1076	1	Axle seatback actuator, upper, F/L, Junior 240
5	1061	1	Bracket for Clam unit F/L, Junior 240
6	1063	1	Bar for back rest frame
7	1043	3	Circlip Ø12, outside DIN 471 Unplated
8	1340	1	Washer M8 DIN 125 Elzink
9	4468	1	Screw, hexagon socket pan head M8x35 DIN 7380 Elzink 8,8
10	3754	1	Screw, set M8x25 DIN 916
11	1100	1	Nut M8 DIN 934 Elzink
12	1213	1	Screw, hexagon socket pan head M8x16 DIN 7380 Elzink 8,8
13	1020	2	Screw, hexagon tensilock M10x20 DIN 6921 Goldfinish
14	1126	1	Nut, tensilock M8 DIN 6923 Goldfinish 8,8
15	1124	6	Screw, hexagon socket pan head M8x25 DIN 7380 Elzink 8,8
16	1070	6	Nut, nylock M8 DIN 985 El.zink 8,8
17	1064	2	Washer M8x20 DIN 522 Elzink
18	1176	2	Sleeve arm, upper
19	9341	2	Screw, hexagon socket pan head M6x40 DIN 7380 Elzink 8,8
20	1023	1	Arm for tilt switch, upper, F/L
21	1039	2	Nut, tensilock M6 DIN 6923 Goldfinish 8,8
22	4015	1	Bar for tilt switch, lengthened, F/L
23	9608	1	Sleeve, tiltswitcharm, upper
24	9607	1	Sleeve, tiltswitcharm, lower "from chassisno 03091800"
25	1107	1	Screw, hexagon socket pan head M6x16 ISO7380 Elzink 10,9
26	1338	1	Washer M6x20 DIN 522 Elzink
27	1312	1	Screw, hexagon socket pan head M6x12 ISO7380 Elzink 10,9
28	1022	1	Arm for the tilt switch, lower
29	2981	2	Washer M10 DIN 125 Elzink
30	9385	2	Plastic clip, Ford
31	4618	1	Screw, hexagon set, M6x6 DIN 916 Unplated
32	3759	1	Nut cover BK13 M8

Part no.	Qty	Description
.	.	.
.	.	.
.	.	.
.	.	.

Product name:	**Support wheels, stand-up function, Balder F/J240 (50mm stroke)**
Product no:	**HP20071017**
Product reference:	**Balder F/J240**
Manufacturer:	Etac AS, www.etac.com
Revision:	**23.08.10**

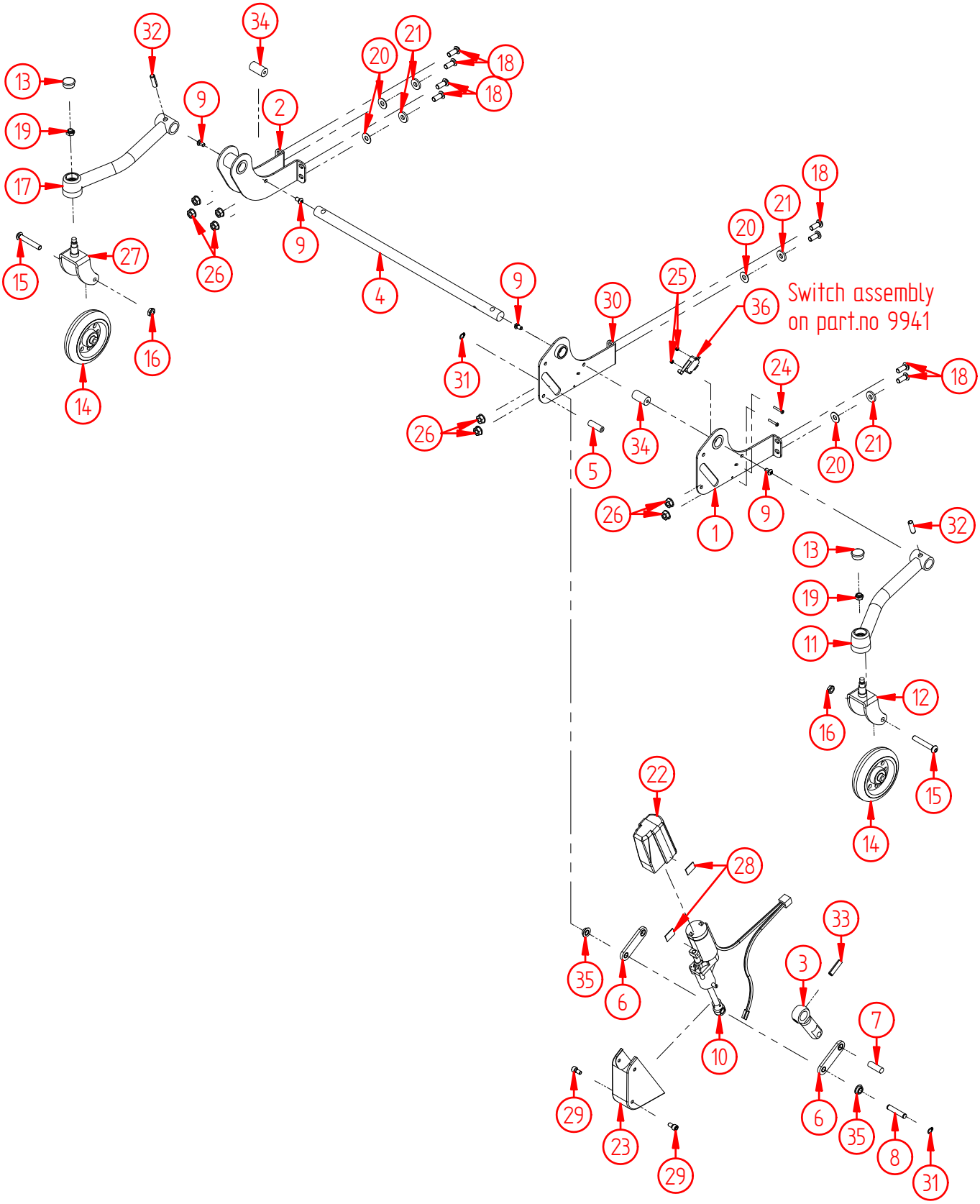

Product name:	**Support wheels, stand-up function, Balder F/J240 (50mm stroke)**
Product no:	**HP20071017**
Product reference:	**Balder F/J240**
Manufacturer:	Etac AS, www.etac.com
Revision:	**23.08.10**

Pos no.	Part no.	Qty	Description
1	9941	1	Bracket,left outer,wheels, standupf. 50mm, from F04022056
2	9569	1	Bracket, axel, right, supportwheels, standup funct.
3	9570	1	Link, actuator, supportwheels, standup funct.
4	9571	1	Axel, main, supportwheels, standup funct.
5	9572	1	Spacer, Ø10xM6x30mm
6	9940	2	Link,actuator,wheels, standupfunct.,from F0402056
7	9574	1	Axel, link, actuator, supportwheels, standup funct.
8	9939	1	Axel,actuator,wheels,standupfunct.,from F04022056
9	3727	4	Screw, hexagon socket pan head M6x10 ISO7380 Elzink 10,9
10	9587	1	Actuator, supportwheels, standup funct,(50mm stroke)
11	9577	1	Wheelarm, left, supportwheels, standup funct.
12	9578	1	Castor fork, left, supportwheels, standup funct., black
13	9560	2	Plate plug B23/20/10
14	9561	2	Wheel w/alu rim Ø100
15	1217	2	Screw, hexagon socket pan head M8x50 DIN 7380 Elzink 8,8
16	1337	2	Nut M8, narrow DIN 439 Elzink
17	9579	1	Wheelarm, right, supportwheels, standup funct.
18	1008	8	Screw, hexagon socket pan head M8x20 DIN 7380 Elzink 8,8
19	1070	2	Nut, nylock M8 DIN 985 El.zink 8,8
20	9581	4	Spacer, Ø20xØ8,5x1mm
21	9582	4	Spacer, Ø20xØ8,5x3mm
22	9589	1	Cover, actuator, supportwheels, standup funct.
23	9583	1	Cover, actuatorbracket, supportwheels, standup funct.
24	9558	2	Screw, cross slotted, pan head M3x20 DIN 7985 Elzink
25	1188	2	Nut, nylock M3 DIN 985 Elzink 8,8
26	1126	8	Nut, tensilock M8 DIN 6923 Goldfinish 8,8
27	9580	1	Castor fork, right, supportwheels, standup funct., black
28	4000	2	Velcroue, loop 20mm, with glue (15mm)
29	4377	2	Screw, hexagon socket M6x12 DIN 912 Elzink 8,8
30	9942	1	Bracket,left inner,wheels, standupf. 50mm, from F04022056
31	1147	2	Circlip Ø8, outside DIN 471 Unplated
32	9927	2	Splint pipe, coil M8x26
33	9926	1	Splint pipe, coil M8x30
34	9575	2	Spacer, Ø16xM6x30mm
35	9928	2	Wheel, axel, actuator,support wheels, stand up funct.
36	10274	1	Microswitch, supportwheelsposition stand-up function

Part no.	Qty	Description
.	.	.
.	.	.
.	.	.
.	.	.

Product name:	**Electronics, stand-up function, Balder F/J240**
Product no:	**HP20071018**
Product reference:	**Balder F/J240**
Manufacturer:	Etac AS, www.etac.com
Revision:	**04.12.07**

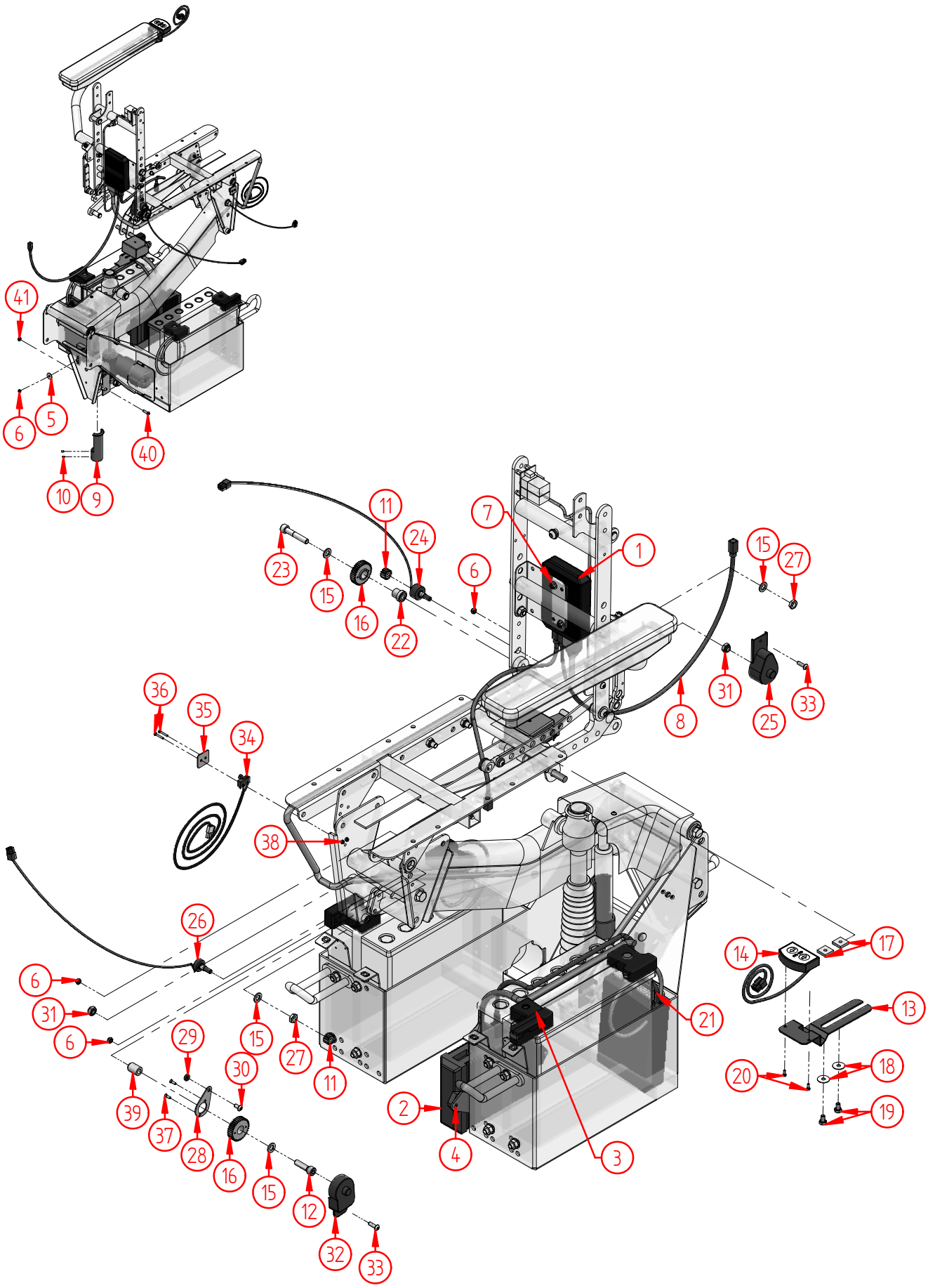

Product name:	**Electronics, stand-up function, Balder F/J240**
Product no:	**HP20071018**
Product reference:	**Balder F/J240**
Manufacturer:	Etac AS, www.etac.com
Revision:	**04.12.07**

Pos no.	Part no.	Qty	Description
1	1161	1	Combined Lighting + Actuator Module CLAMB2
2	3742	1	Heavy Duty Power Module - DX-PM2 (80 amp)
3	3829	1	Covers, battery terminal (2+1+1)
4	9803	2	Screw, umbraco M4x8 DIN 912 Elzink 8,8
5	3735	1	Washer M5x20 DIN 522 Elzink
6	1190	4	Nut, nylock M5 DIN 985 Elzink 8,8
7	1189	2	Nut, tensilock M5 DIN 6923 Goldfinish 8.8
8	11611	1	Cabelset, complete, Balder F/J stand-up function
9	9565	1	Sleeve, gashock, supportwheels, standup funct.
10	1334	2	Set screw M4x6 DIN 916
11	9537	2	Toothed wheel, Ø16, potmeter, stand-up function
12	4896	1	Screw, hexagon socket M8x30 DIN 912 Elzink 8,8
13	9546	1	Bracket, panel 59x40mm, front armrest F/L/J
14	9548	1	Controlpanel, stand-up function
15	1340	4	Washer M8 DIN 125 Elzink
16	9536	2	Toothed wheel, Ø38, potmeter, stand-up function
17	1276	2	Nut 18x18x4xM6, square, steel
18	1338	2	Washer M6x20 DIN 522 Elzink
19	2766	2	Screw, hexagon M6x10 DIN 933 Elzink 8,8
20	4757	2	Screw, slotted, pan head M3x8 DIN 84 Elzink
21	9543	1	Electronic, stand-up function
22	9535	1	Sleeve, backrestbracket, stand-up function
23	9542	1	Screw, hexagon socket M8x45 DIN 912 Elzink 8,8
24	9538	1	Potmeter, compl, backrestbracket, stand-up function
25	9541	1	Cover, potmeter, backrest bracket, stand-up function
26	9539	1	Potmeter, compl, tiltbracket, stand-up function
27	1337	2	Nut M8, narrow DIN 439 Elzink
28	9533	1	Adjustingplate, tiltbracket, stand-up function
29	9534	1	Spacer,black, plastic T10/3/5
30	4402	1	Screw, hexagon socket pan head M5x10 ISO 7380 Elzink 10,9
31	9598	2	Nut, M8, prevailing torque DIN 980
32	9540	1	Cover, potmeter, tiltbracket, stand-up function
33	4401	2	Screw, hexagon socket pan head M5x16 ISO7380 Elzink 10,9
34	9544	1	Microswitch, compl, tiltbracket, stand-up function
35	4550	1	Coverplate, microswitch, tiltbracket, stand-up function
36	9545	2	Screw, cross slotted, pan head M2,5x16 DIN 7985 Elzink
37	1376	2	Countersunk headed screw M3x10 DIN 963
38	1187	2	Nut, nylock M2,5 DIN 985 Elzink 8,8
39	9532	1	Sleeve, tiltbracket, stand-up function
40	1346	1	Screw, hexagon socket pan head M6x20 DIN 7380 Elzink 10,9
41	1157	1	Nut, nylock M6 DIN 985 Elzink 8,8

Part no.	Qty	Description
.	.	.
.	.	.
.	.	.
.	.	.

Product name:	**Electronics, tilt, Balder F/J**
Product no:	**HP20071019**
Product reference:	**Balder F/J**
Manufacturer:	Etac AS, www.etac.com
Revision:	**01.01.07**

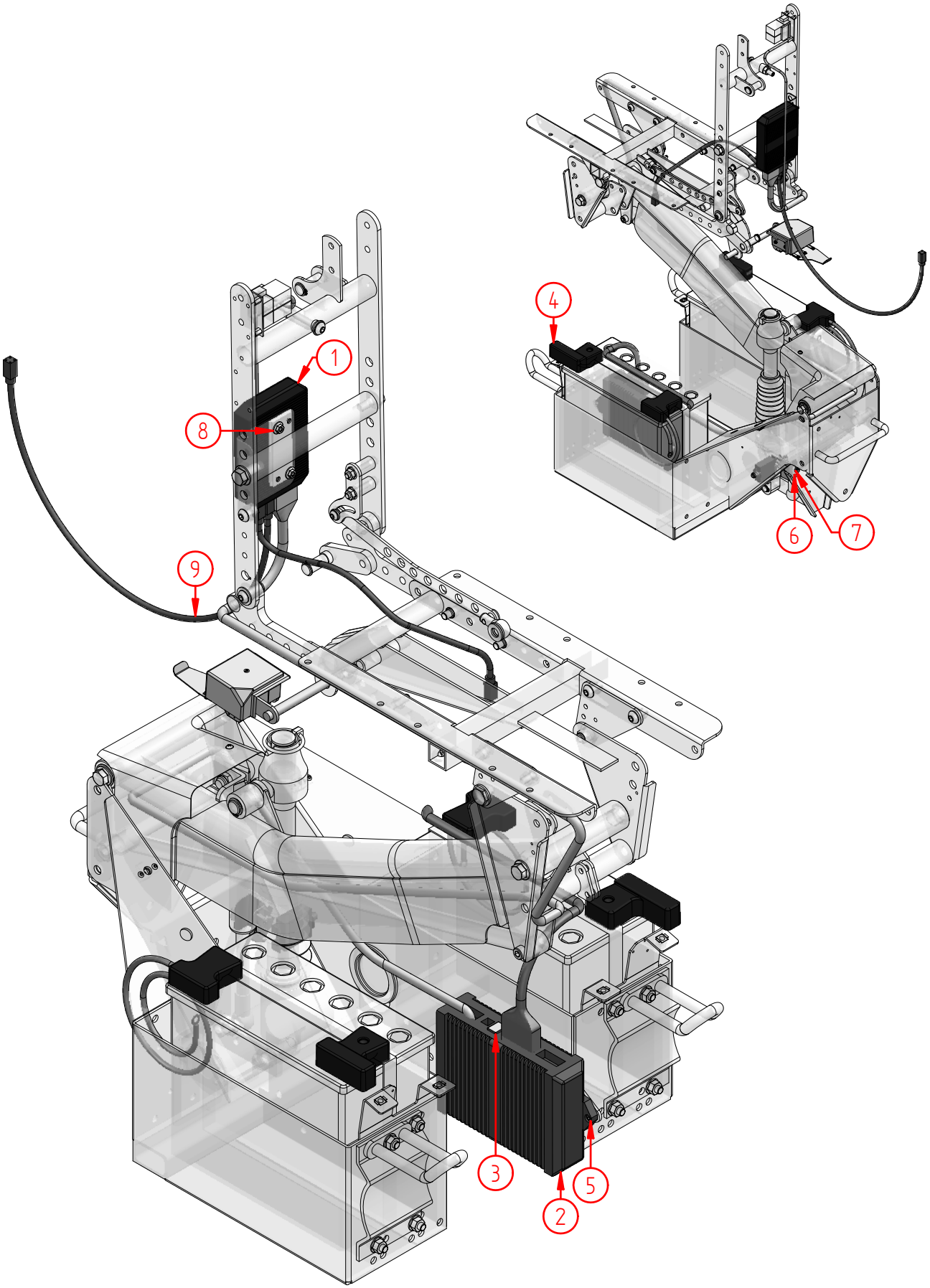

Product name:	**Electronics, tilt, Balder F/J**
Product no:	**HP20071019**
Product reference:	**Balder F/J**
Manufacturer:	Etac AS, www.etac.com
Revision:	**01.01.07**

Pos no.	Part no.	Qty	Description
1	1161	1	Combined Lighting + Actuator Module CLAMB2
2	3742	1	Heavy Duty Power Module - DX-PM2 (80 amp)
3	9517	1	Blanking cap, DX contact
4	3829	1	Covers, battery terminal (2+1+1)
5	9803	2	Screw, umbraco M4x8 DIN 912 Elzink 8,8
6	3735	1	Washer M5x20 DIN 522 Elzink
7	1190	1	Nut, nylock M5 DIN 985 Elzink 8,8
8	1189	2	Nut, tensilock M5 DIN 6923 Goldfinish 8.8
9	11609	1	Cabelset, complete, Balder F/J tilt function

Part no.	Qty	Description
.	.	.
.	.	.
.	.	.
.	.	.

Product name:	**Electronics, tilt, Balder L**
Product no:	**HP20071020**
Product reference:	**Balder L**
Manufacturer:	Etac AS, www.etac.com
Revision:	**01.01.07**

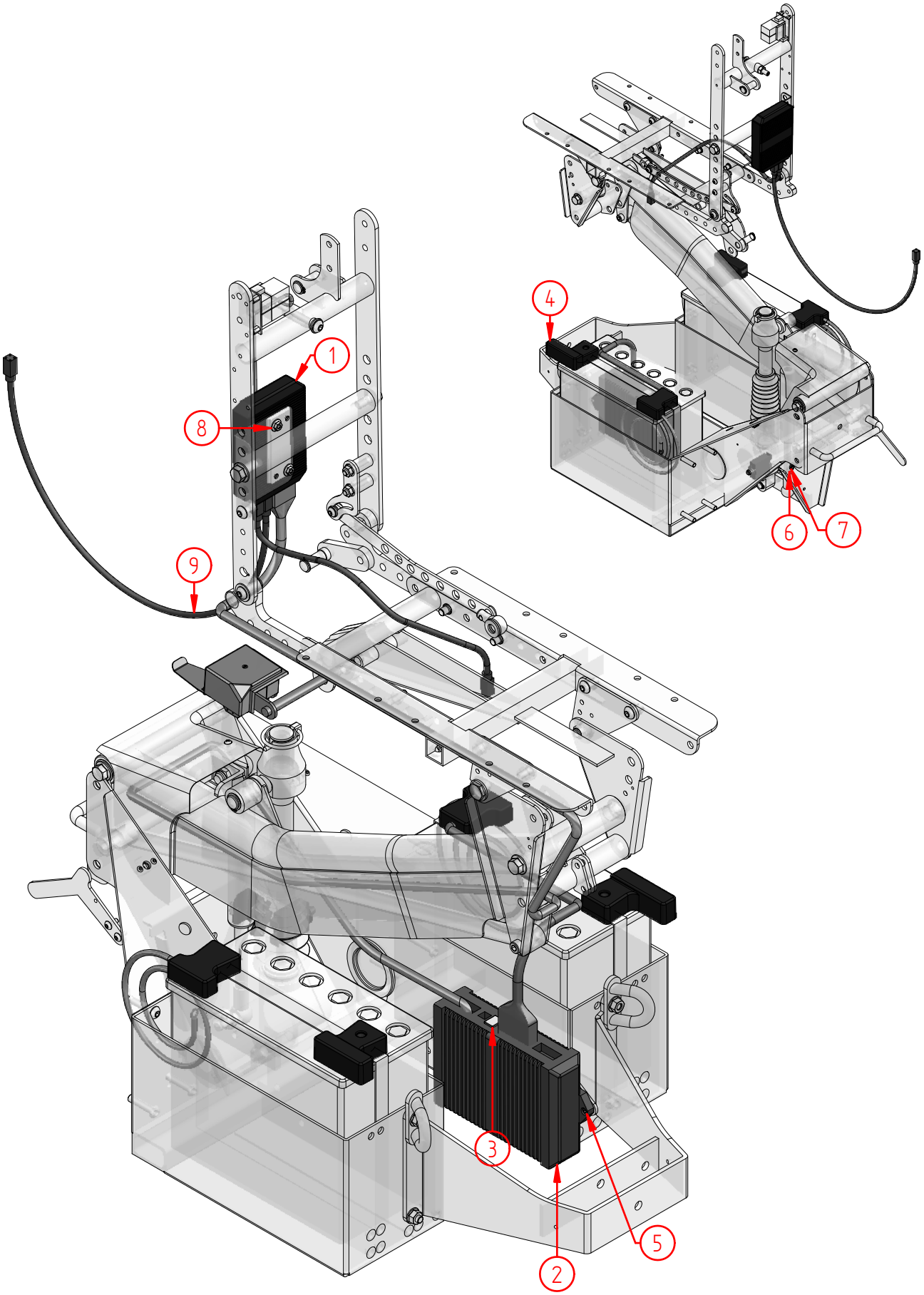

Product name:	**Electronics, tilt, Balder L**
Product no:	**HP20071020**
Product reference:	**Balder L**
Manufacturer:	Etac AS, www.etac.com
Revision:	**01.01.07**

Pos no.	Part no.	Qty	Description
1	1161	1	Combined Lighting + Actuator Module CLAMB2
2	3742	1	Heavy Duty Power Module - DX-PM2 (80 amp)
3	9517	1	Blanking cap, DX contact
4	3829	1	Covers, battery terminal (2+1+1)
5	9803	2	Screw, umbraco M4x8 DIN 912 Elzink 8,8
6	3735	1	Washer M5x20 DIN 522 Elzink
7	1190	1	Nut, nylock M5 DIN 985 Elzink 8,8
8	1189	2	Nut, tensilock M5 DIN 6923 Goldfinish 8.8
9	11610	1	Cabelset, complete, Balder L tilt function

Part no.	Qty	Description
.	.	.
.	.	.
.	.	.
.	.	.

Product name:	**Cover, chasssis, screw, Balder F**
Product no:	**HP20071021**
Product reference:	**Balder F**
Manufacturer:	Etac AS, www.etac.com
Revision:	**01.01.07**

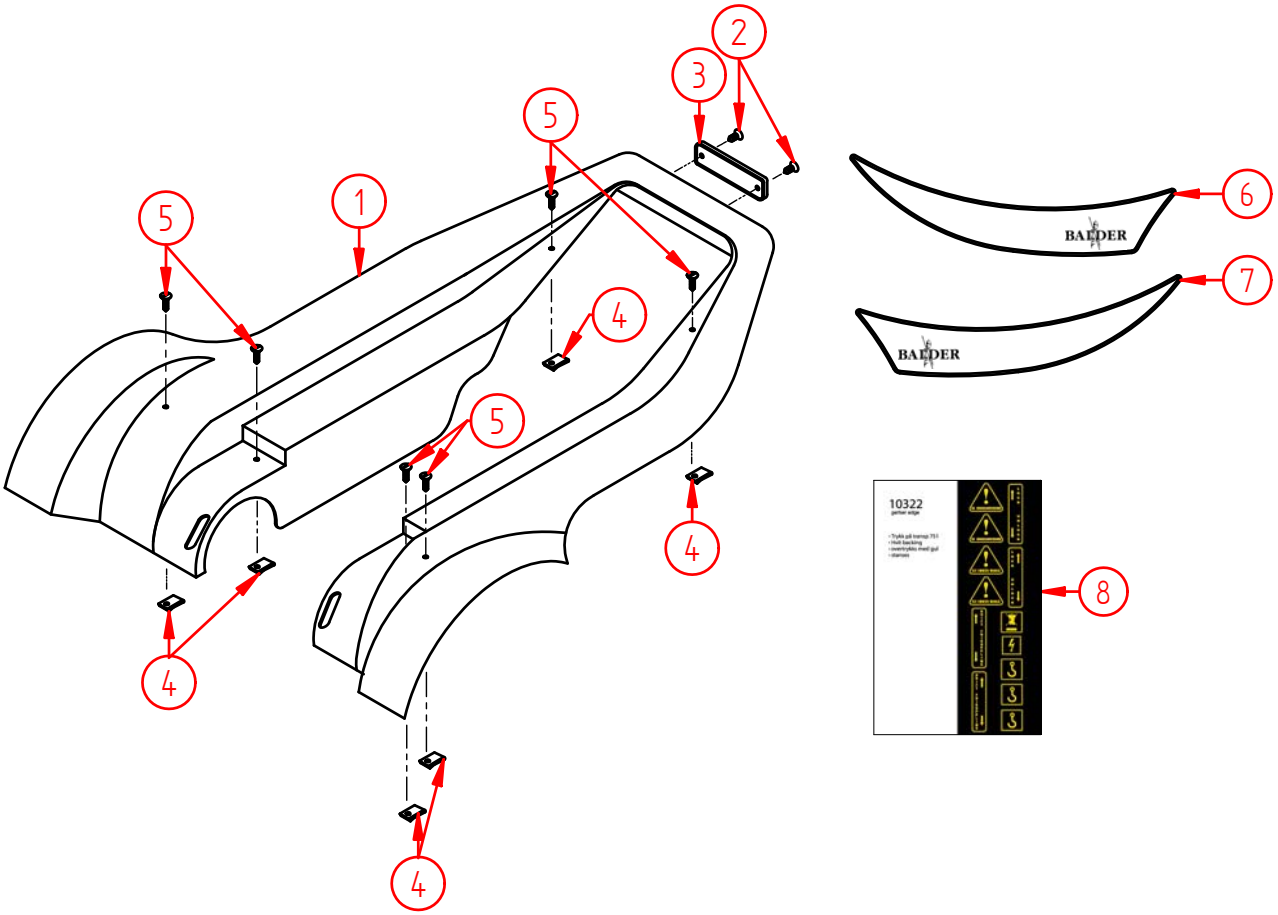

Product name:	**Cover, chasssis, screw, Balder F**
Product no:	**HP20071021**
Product reference:	**Balder F**
Manufacturer:	Etac AS, www.etac.com
Revision:	**01.01.07**

Pos no.	Part no.	Qty	Descrition
1	1115	1	Body Moulding Balder F/J, (til chno 05052669)
2	10733	2	Plate Screw, 4,0x20, Wupo Elzink
3	3840	1	Reflex Balder F/L
4	1344	6	Nut clip 4,2mm
5	1116	6	Plate screw w/washer M4,2x16 DIN 7981 black
6	9650	1	Label, Balder F, body moulding, right side
7	9651	1	Label, Balder F, body moulding, left side
8	10322	1	Labelset, Balder warning, transparent

Part no.	Qty	Description
.	.	.
.	.	.
.	.	.
.	.	.

Product name:	**Cover, chasssis, dzus, Balder F**
Product no:	**HP20071022**
Product reference:	**Balder F**
Manufacturer:	Etac AS, www.etac.com
Revision:	**01.01.07**

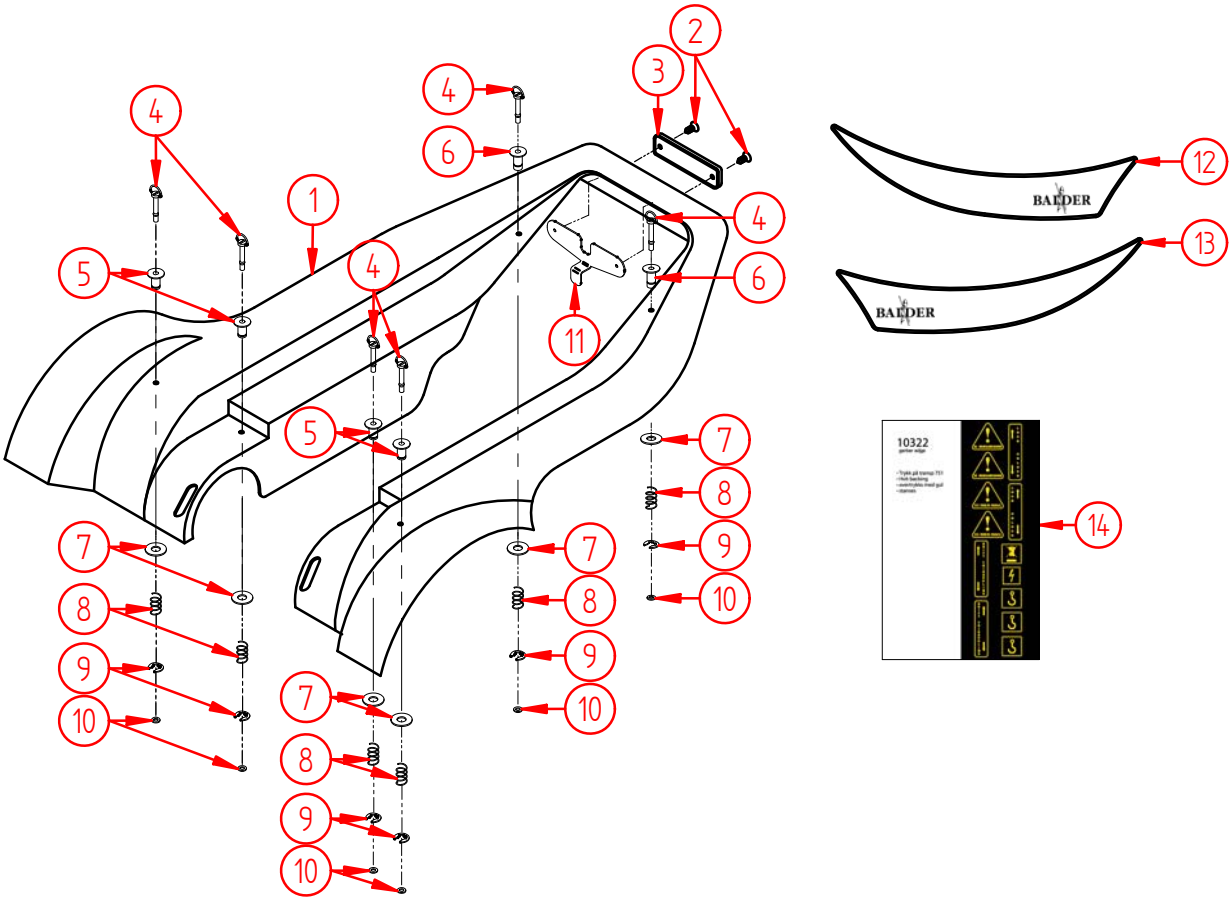

Product name:	**Cover, chasssis, dzus, Balder F**
Product no:	**HP20071022**
Product reference:	**Balder F**
Manufacturer:	Etac AS, www.etac.com
Revision:	**01.01.07**

Pos no.	Part no.	Qty	Descrition
1	10734	1	Body Moulding Balder F/J, (fra chno. 05052670)
2	10733	2	Plate Screw, 4,0x20, Wupo Elzink
3	3840	1	Reflex Balder F/L
4	10699	6	Lock stud, dzus, quarter-turn
5	10718	4	Springwasher, for dzus, L:16mm
6	10719	2	Springwasher, for dzus, L:19mm
7	1064	6	Washer M8x20, Din 522 Elzink
8	10695	6	Spring SF-TFR 0,75x9x20
9	10696	6	Clip, RS ø7mm DIN 6799 SS1770
10	10693	6	Washer, nylon ø8/ø4,3x1mm
11	10720	1	Bracket, fixing rear light Balder F/J
12	9650	1	Label, Balder F, body moulding, right side
13	9651	1	Label, Balder F, body moulding, left side
14	10322	1	Labelset, Balder warning, transparent

Part no.	Qty	Description
.	.	.
.	.	.
.	.	.
.	.	.

Product name:	**Cover, chasssis, dzus, seat stabilizer, Balder F**
Product no:	**HP20071023**
Product reference:	**Balder F**
Manufacturer:	Etac AS, www.etac.com
Revision:	**22.04.08**

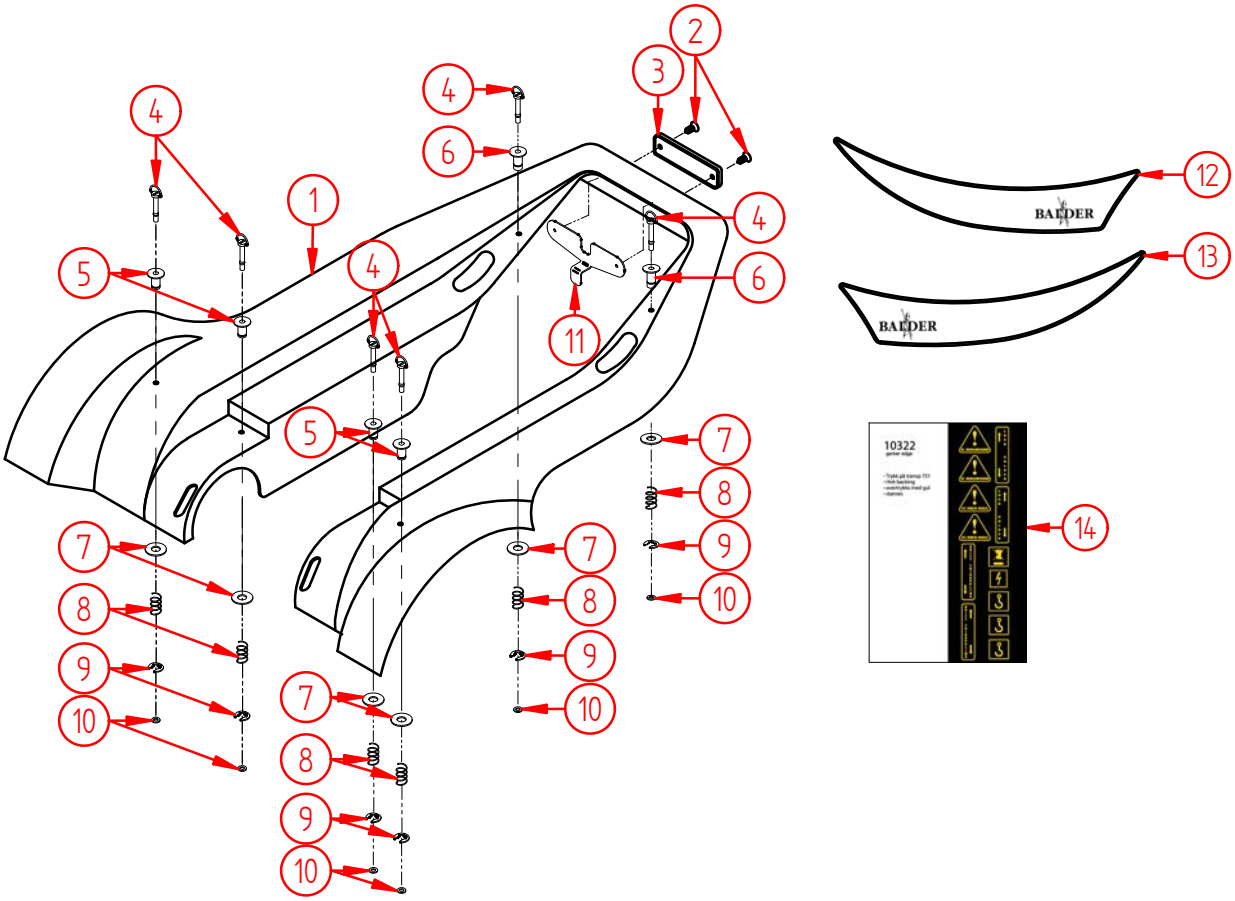

Product name:	**Cover, chasssis, dzus, seat stabilizer, Balder F**
Product no:	**HP20071023**
Product reference:	**Balder F**
Manufacturer:	Etac AS, www.etac.com
Revision:	**22.04.08**

Pos no.	Part no.	Qty	Descrition
1	10735	1	Body Moulding Balder F/J, (w/seat stabilizer)
2	10733	2	Plate Screw, 4,0x20, Wupo Elzink
3	3840	1	Reflex Balder F/L
4	10699	6	Lock stud, dzus, quarter-turn
5	10718	4	Springwasher, for dzus, L:16mm
6	10719	2	Springwasher, for dzus, L:19mm
7	1064	6	Washer M8x20, Din 522 Elzink
8	10695	6	Spring SF-TFR 0,75x9x20
9	10696	6	Clip, RS ø7mm DIN 6799 SS1770
10	10693	6	Washer, nylon ø8/ø4,3x1mm
11	10720	1	Bracket, fixing rear light Balder F/J
12	9650	1	Label, Balder F, body moulding, right side
13	9651	1	Label, Balder F, body moulding, left side
14	10322	1	Labelset, Balder warning, transparent

Part no.	Qty	Description
.	.	.
.	.	.
.	.	.
.	.	.

Product name:	**Cover, chasssis, dzus, Red, Balder J**
Product no:	**HP20071024**
Product reference:	**Balder J**
Manufacturer:	Etac AS, www.etac.com
Revision:	**01.01.07**

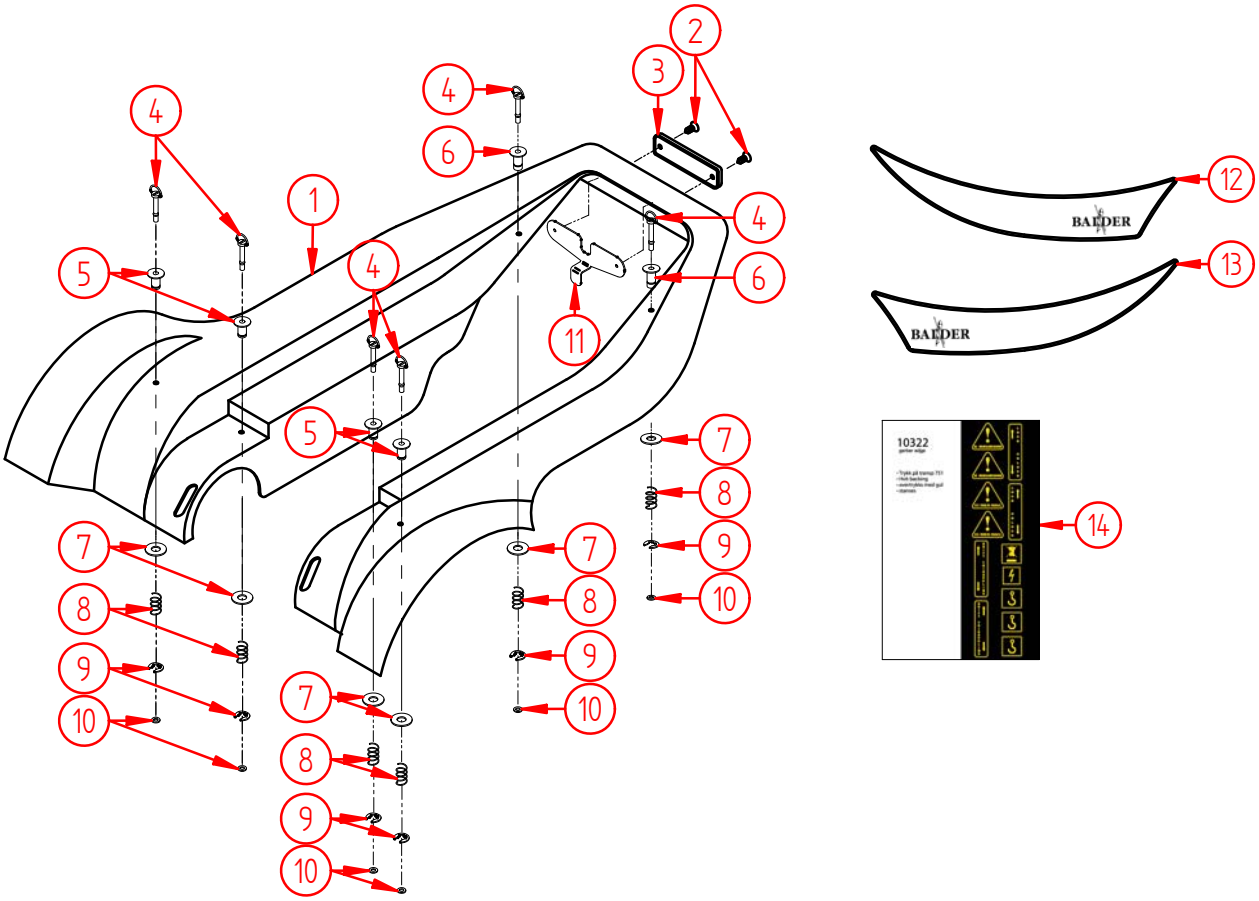

Product name:	**Cover, chasssis, dzus, Red, Balder J**
Product no:	**HP20071024**
Product reference:	**Balder J**
Manufacturer:	Etac AS, www.etac.com
Revision:	**01.01.07**

Pos no.	Part no.	Qty	Descrition
1	11652	1	Body Moulding, Red, Balder Junior
2	10733	2	Plate Screw, 4,0x20, Wupo Elzink
3	3840	1	Reflex Balder F/L
4	10699	6	Lock stud, dzus, quarter-turn
5	10718	4	Springwasher, for dzus, L:16mm
6	10719	2	Springwasher, for dzus, L:19mm
7	1064	6	Washer M8x20, Din 522 Elzink
8	10695	6	Spring SF-TFR 0,75x9x20
9	10696	6	Clip, RS ø7mm DIN 6799 SS1770
10	10693	6	Washer, nylon ø8/ø4,3x1mm
11	10720	1	Bracket, fixing rear light Balder F/J
12	9650	1	Label, Balder F, body moulding, right side
13	9651	1	Label, Balder F, body moulding, left side
14	10322	1	Labelset, Balder warning, transparent

Part no.	Qty	Description
.	.	.
.	.	.
.	.	.
.	.	.

Product name:	**Cover, chasssis, dzus, Blue, Balder J**
Product no:	**HP20071025**
Product reference:	**Balder J**
Manufacturer:	Etac AS, www.etac.com
Revision:	**01.01.07**

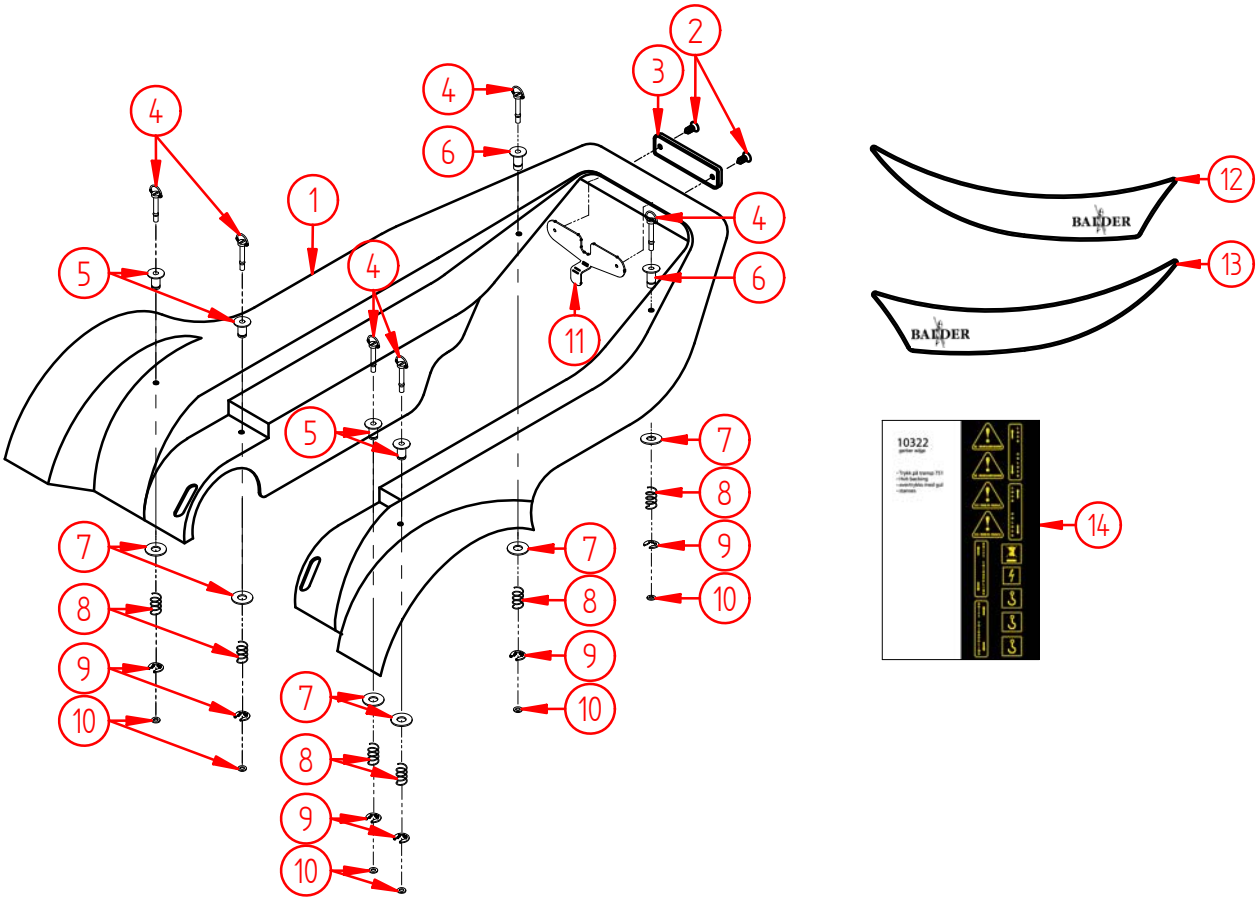

Product name:	**Cover, chasssis, dzus, Blue, Balder J**
Product no:	**HP20071025**
Product reference:	**Balder J**
Manufacturer:	Etac AS, www.etac.com
Revision:	**01.01.07**

Pos no.	Part no.	Qty	Descrition
1	11653	1	Body Moulding, Blue, Balder Junior
2	10733	2	Plate Screw, 4,0x20, Wupo Elzink
3	3840	1	Reflex Balder F/L
4	10699	6	Lock stud, dzus, quarter-turn
5	10718	4	Springwasher, for dzus, L:16mm
6	10719	2	Springwasher, for dzus, L:19mm
7	1064	6	Washer M8x20, Din 522 Elzink
8	10695	6	Spring SF-TFR 0,75x9x20
9	10696	6	Clip, RS ø7mm DIN 6799 SS1770
10	10693	6	Washer, nylon ø8/ø4,3x1mm
11	10720	1	Bracket, fixing rear light Balder F/J
12	9650	1	Label, Balder F, body moulding, right side
13	9651	1	Label, Balder F, body moulding, left side
14	10322	1	Labelset, Balder warning, transparent

Part no.	Qty	Description
.	.	.
.	.	.
.	.	.
.	.	.

Product name:	**Cover, chasssis, dzus, Green, Balder J**
Product no:	**HP20071026**
Product reference:	**Balder J**
Manufacturer:	Etac AS, www.etac.com
Revision:	**01.01.07**

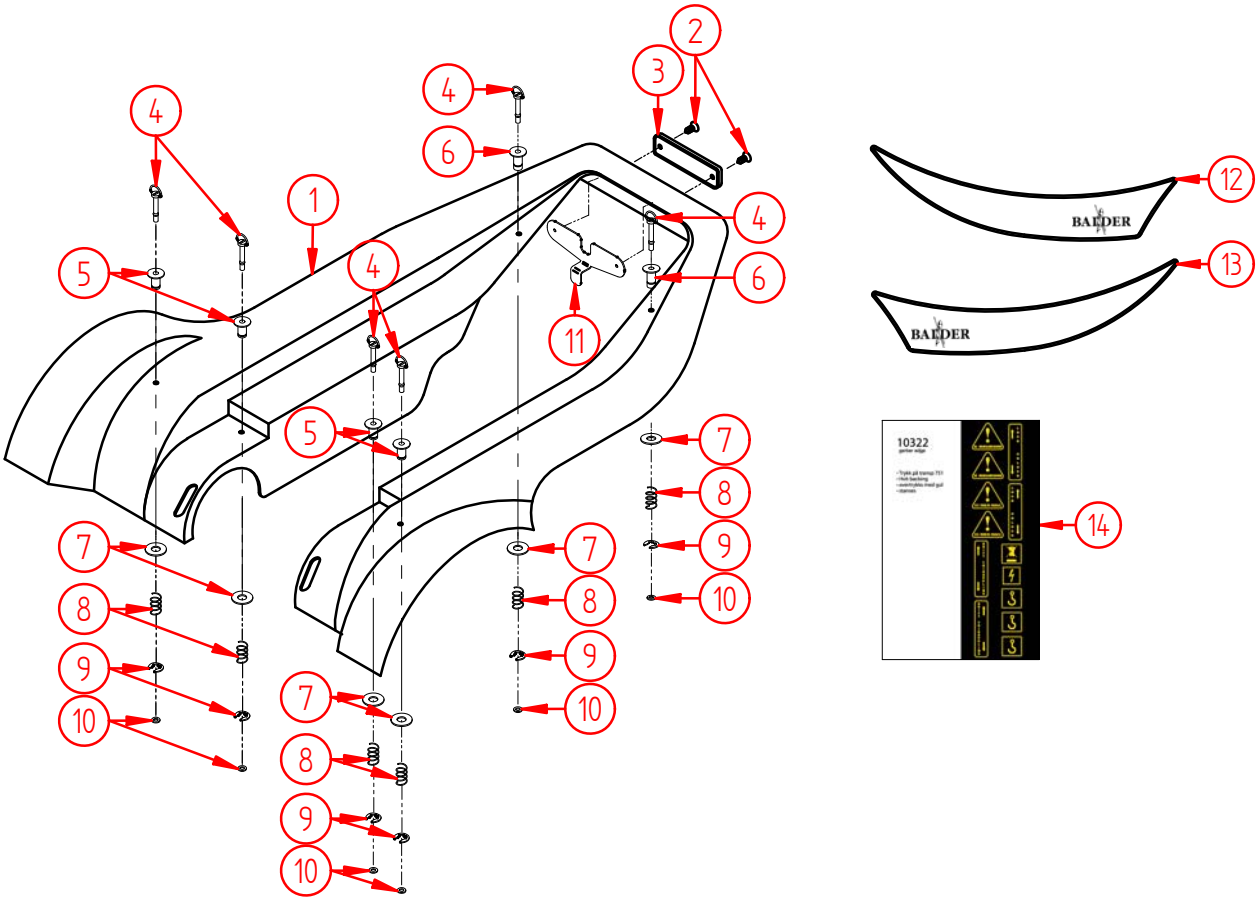

Product name:	**Cover, chasssis, dzus, Green, Balder J**
Product no:	**HP20071026**
Product reference:	**Balder J**
Manufacturer:	Etac AS, www.etac.com
Revision:	**01.01.07**

Pos no.	Part no.	Qty	Descrition
1	11654	1	Body Moulding, Green, Balder Junior
2	10733	2	Plate Screw, 4,0x20, Wupo Elzink
3	3840	1	Reflex Balder F/L
4	10699	6	Lock stud, dzus, quarter-turn
5	10718	4	Springwasher, for dzus, L:16mm
6	10719	2	Springwasher, for dzus, L:19mm
7	1064	6	Washer M8x20, Din 522 Elzink
8	10695	6	Spring SF-TFR 0,75x9x20
9	10696	6	Clip, RS ø7mm DIN 6799 SS1770
10	10693	6	Washer, nylon ø8/ø4,3x1mm
11	10720	1	Bracket, fixing rear light Balder F/J
12	9650	1	Label, Balder F, body moulding, right side
13	9651	1	Label, Balder F, body moulding, left side
14	10322	1	Labelset, Balder warning, transparent

Part no.	Qty	Description
.	.	.
.	.	.
.	.	.
.	.	.

Product name:	**Cover, chasssis, screw, Balder L**
Product no:	**HP20071027**
Product reference:	**Balder L**
Manufacturer:	Etac AS, www.etac.com
Revision:	**21.10.08**

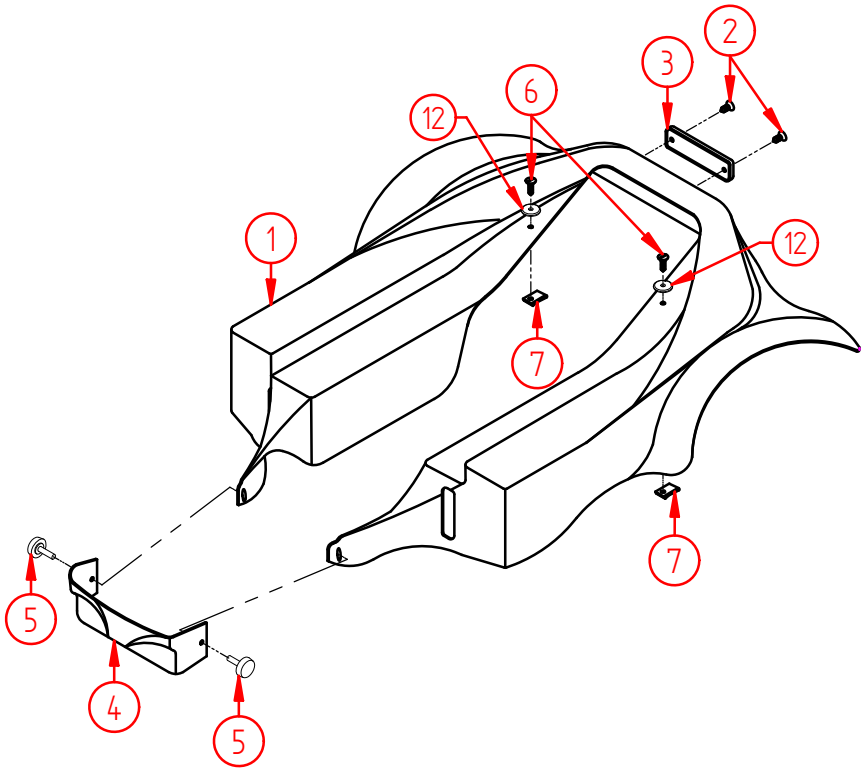

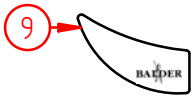

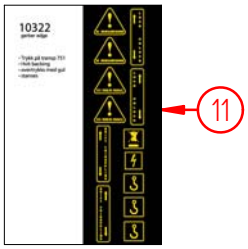

Product name:	**Cover, chasssis, screw, Balder L**
Product no:	**HP20071027**
Product reference:	**Balder L**
Manufacturer:	Etac AS, www.etac.com
Revision:	**21.10.08**

Pos no.	Part no.	Qty	Descrition
1	4478	1	Body Moulding Balder L
2	9403	2	Plate Screw, 4,0x16 Wupo Elzink
3	3840	1	Reflex Balder F/L
4	4479	1	Bodymoulding Balder L
5	11099	2	Fingerskrew Ø20, M5x20
6	1116	2	Plate screw w/washer M4,2x16 DIN 7981 black
7	1344	2	Nut clip 4,2mm
8	9791	1	Label, Balder L, body moulding, rear
9	9792	1	Label, Balder L, body moulding, RH side
10	9793	1	Label, Balder L, body moulding, LH side
11	10322	1	Labelset, Balder warning, transparent
12	12481	2	Washer, nylon sort, ø18x4,3x2,0mm

Part no.	Qty	Description
.	.	.
.	.	.
.	.	.
.	.	.

Product name:	**Cover, chasssis, dzus, Balder L**
Product no:	**HP20071028**
Product reference:	**Balder L**
Manufacturer:	Etac AS,□□www.etac.com
Revision:	**01.01.07**

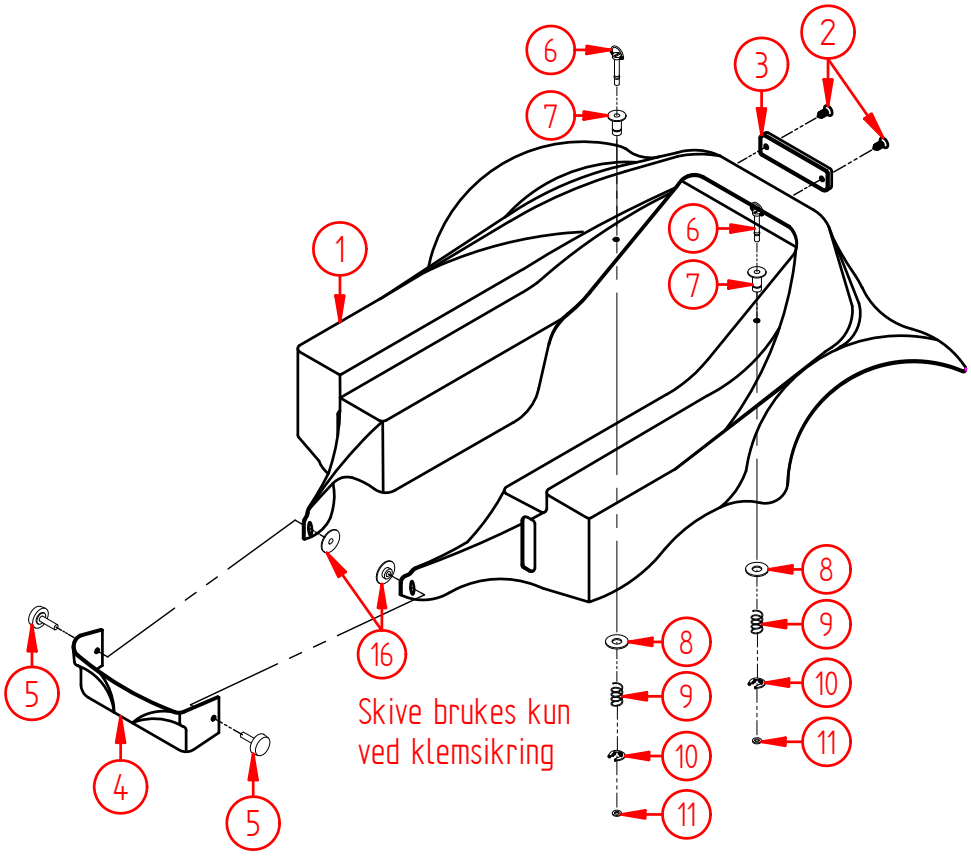

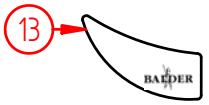

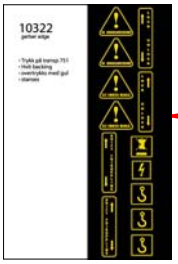

Product name:	**Cover, chasssis, dzus, Balder L**
Product no:	**HP20071028**
Product reference:	**Balder L**
Manufacturer:	Etac AS, www.etac.com
Revision:	**01.01.07**

Pos no.	Part no.	Qty	Descrition
1	4478	1	Body Moulding Balder L
2	9403	2	Plate Screw, 4,0x16 Wupo Elzink
3	3840	1	Reflex Balder F/L
4	4479	1	Bodymoulding Balder L
5	11099	2	Fingerskrew Ø20, M5x20
6	10699	2	Lock stud, dzus, quarter-turn
7	10719	2	Springwasher, for dzus, L:19mm
8	1064	2	Washer M8x20 DIN 522 Elzink
9	10695	2	Spring SF-TFR 0,75x9x20
10	10696	2	Clip, RS ø7mm DIN 6799 SS1770
11	10693	2	Washer, nylon, ø8/ø4,3x1mm
12	9791	1	Label, Balder L, body moulding, rear
13	9792	1	Label, Balder L, body moulding, RH side
14	9793	1	Label, Balder L, body moulding, LH side
15	10322	1	Labelset, Balder warning, transparent
16	11119	2	Washer, bodymoulding front, anti crush guard L

Part no.	Qty	Description
.	.	.
.	.	.
.	.	.
.	.	.

Product name:	**Cover, back-frame, Balder F**
Product no:	**HP20071029**
Product reference:	**Balder F**
Manufacturer:	Etac AS, www.etac.com
Revision:	**23.09.10**

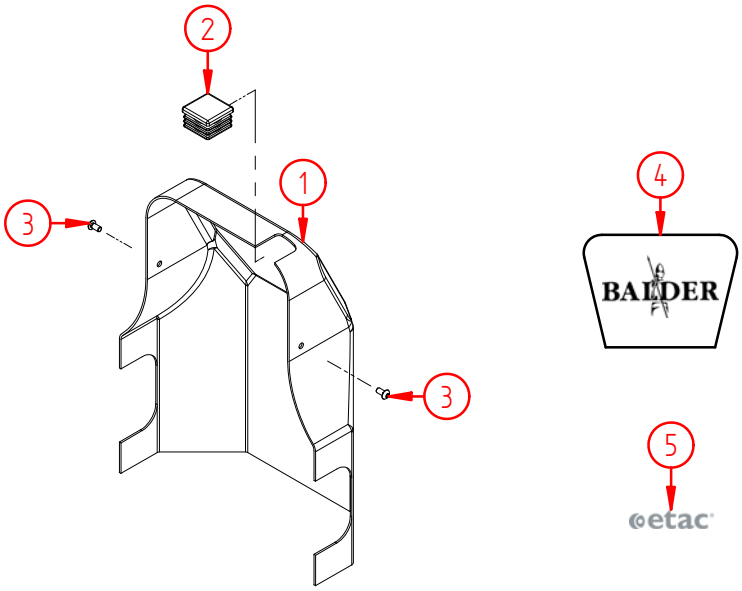

Product name:	**Cover, back-frame, Balder L**
Product no:	**HP20071030**
Product reference:	**Balder L**
Manufacturer:	Etac AS, www.etac.com
Revision:	**23.09.10**

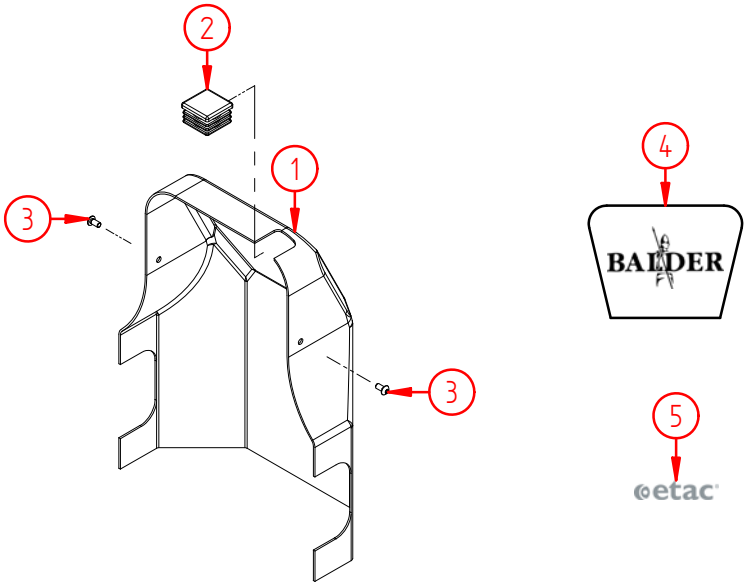

Product name:	**Cover, back-frame, Balder F**
Product no:	**HP20071029**
Product reference:	**Balder F**
Manufacturer:	Etac AS, www.etac.com
Revision:	**23.09.10**

Pos no.	Part no.	Qty	Description
1	1118	1	Cover for back Balder F/L/J240
2	12429	1	Ribbed plastic insert 35x35, black, square
3	4402	2	Screw, hexagon socket pan head M5x10 ISO 7380 Elzink 10,9
4	9789	1	Label, Balder F, rear cover
5	12894	1	Label, ETAC logo, 70x17,5mm, silver

Alternative til 1118: 10740 - Cover for back Balder F/L (without cut forarmrests)

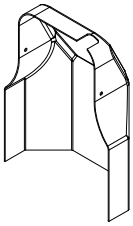

Product name:	**Cover, back-frame, Balder L**
Product no:	**HP20071030**
Product reference:	**Balder L**
Manufacturer:	Etac AS, www.etac.com
Revision:	**23.09.10**

Pos no.	Part no.	Qty	Description
1	1118	1	Cover for back Balder F/L/J240
2	12429	1	Ribbed plastic insert 35x35, black, square
3	4402	2	Screw, hexagon socket pan head M5x10 ISO 7380 Elzink 10,9
4	9794	1	Label, Balder L, rear cover
5	12894	1	Label, ETAC logo, 70x17,5mm, silver

Alternative til 1118: 10740 - Cover for back Balder F/L (without cut forarmrests)

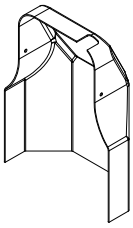

Product name:	**Cover, back-frame, Red, Balder J240**
Product no:	**HP20071031**
Product reference:	**Balder J**
Manufacturer:	Etac AS, www.etac.com
Revision:	**23.09.10**

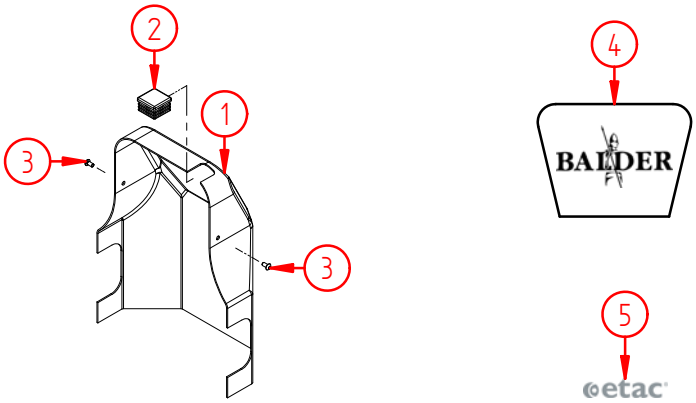

Product name:	**Cover, back-frame, Blue, Balder J240**
Product no:	**HP20071032**
Product reference:	**Balder J**
Manufacturer:	Etac AS, www.etac.com
Revision:	**23.09.10**

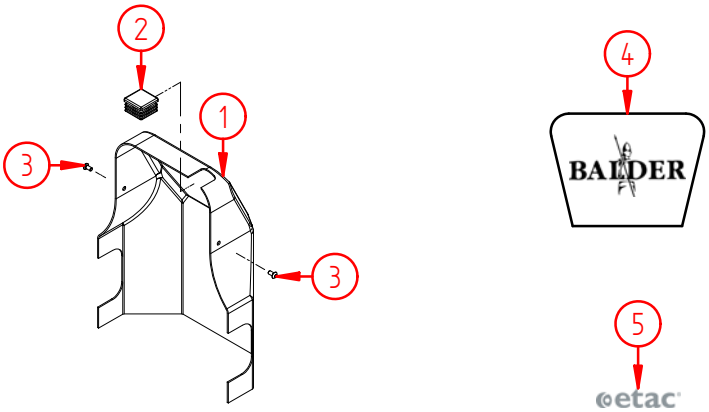

Product name:	**Cover, back-frame, Green, Balder J240**
Product no:	**HP20071033**
Product reference:	**Balder J**
Manufacturer:	Etac AS, www.etac.com
Revision:	**23.09.10**

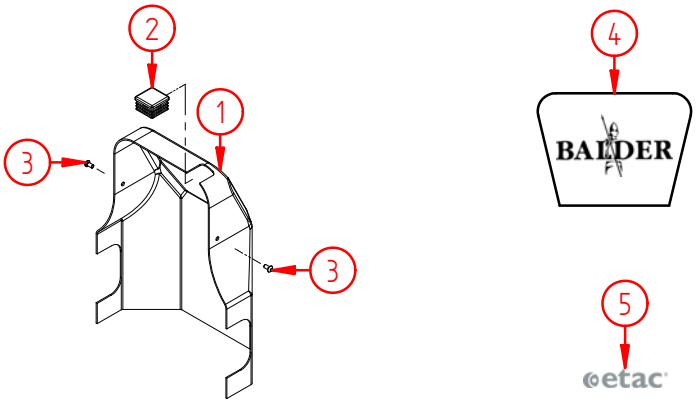

Product name:	**Cover, back-frame, Red, Balder J240**
Product no:	**HP20071031**
Product reference:	Balder J
Manufacturer:	Etac AS, www.etac.com
Revision:	23.09.10

Pos no.	Part no.	Qty	Description
1	11649	1	Cover for back, Red, Balder Junior 240
2	12429	1	Ribbed plastic insert 35x35, black, square
3	4402	2	Screw, hexagon socket pan head M5x10 ISO 7380 Elzink 10,9
4	9789	1	Label, rear cover, Balder F
5	12894	1	Label, ETAC logo, 70x17,5mm, silver

Product name:	**Cover, back-frame, Blue, Balder J240**
Product no:	**HP20071032**
Product reference:	Balder J
Manufacturer:	Etac AS, www.etac.com
Revision:	23.09.10

Pos no.	Part no.	Qty	Description
1	11650	1	Cover for back, Blue, Balder Junior 240
2	12429	1	Ribbed plastic insert 35x35, black, square
3	4402	2	Screw, hexagon socket pan head M5x10 ISO 7380 Elzink 10,9
4	9789	1	Label, rear cover, Balder F
5	12894	1	Label, ETAC logo, 70x17,5mm, silver

Product name:	**Cover, back-frame, Green, Balder J240**
Product no:	**HP20071033**
Product reference:	Balder J
Manufacturer:	Etac AS, www.etac.com
Revision:	23.09.10

Pos no.	Part no.	Qty	Description
1	11651	1	Cover for back, Green, Balder Junior 240
2	12429	1	Ribbed plastic insert 35x35, black, square
3	4402	2	Screw, hexagon socket pan head M5x10 ISO 7380 Elzink 10,9
4	9789	1	Label, rear cover, Balder F
5	12894	1	Label, ETAC logo, 70x17,5mm, silver

Product name:	**Cover, back-frame, Red, Balder J**
Product no:	**HP20071034**
Product reference:	**Balder J**
Manufacturer:	Etac AS, www.etac.com
Revision:	**01.01.07**

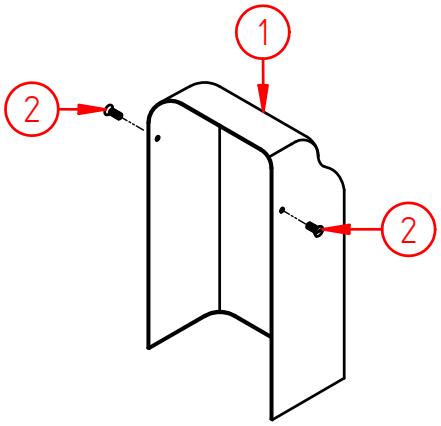

Product name:	**Cover, back-frame, Blue, Balder J**
Product no:	**HP20071035**
Product reference:	**Balder J**
Manufacturer:	Etac AS, www.etac.com
Revision:	**01.01.07**

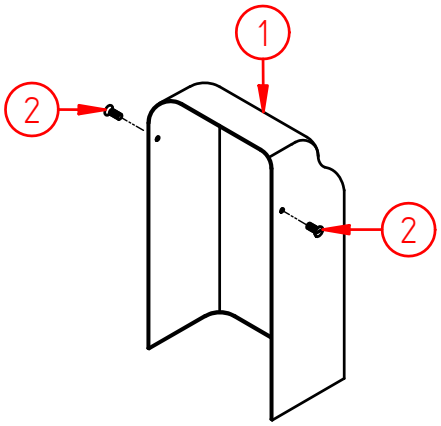

Product name:	**Cover, back-frame, Green, Balder J**
Product no:	**HP20071036**
Product reference:	**Balder J**
Manufacturer:	Etac AS, www.etac.com
Revision:	**01.01.07**

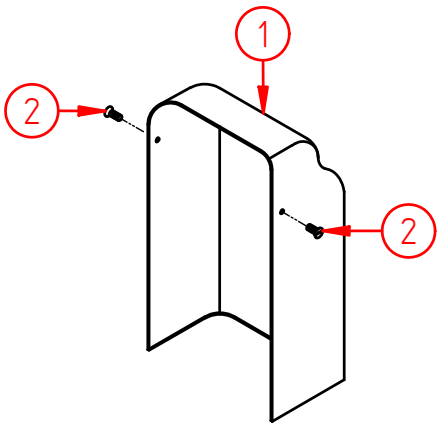

Product name:	**Cover, back-frame, Red, Balder J**
Product no:	**HP20071034**
Product reference:	**Balder J**
Manufacturer:	Etac AS,□□www.etac.com
Revision:	**01.01.07**

Pos no.	Part no.	Qty	Descrition
1	11646	1	Cover for back, Red, Balder Junior 230/235
2	4402	2	Screw, hexagon socket pan head M5x10 ISO 7380 Elzink 10,9

Product name:	**Cover, back-frame, Blue, Balder J**
Product no:	**HP20071035**
Product reference:	**Balder J**
Manufacturer:	Etac AS,□□www.etac.com
Revision:	**01.01.07**

Pos no.	Part no.	Qty	Descrition
1	11647	1	Cover for back, Blue, Balder Junior 230/235
2	4402	2	Screw, hexagon socket pan head M5x10 ISO 7380 Elzink 10,9

Product name:	**Cover, back-frame, Green, Balder J**
Product no:	**HP20071036**
Product reference:	**Balder J**
Manufacturer:	Etac AS,□□www.etac.com
Revision:	**01.01.07**

Pos no.	Part no.	Qty	Descrition
1	11648	1	Cover for back, Green, Balder Junior 230/235
2	4402	2	Screw, hexagon socket pan head M5x10 ISO 7380 Elzink 10,9

Product name:	**Support wheels, stand-up function, Balder F/J240 (37mm stroke)**
Product no:	**HP20071325**
Product reference:	**Balder F/J240**
Manufacturer:	Etac AS, www.etac.com
Revision:	**01.01.07**

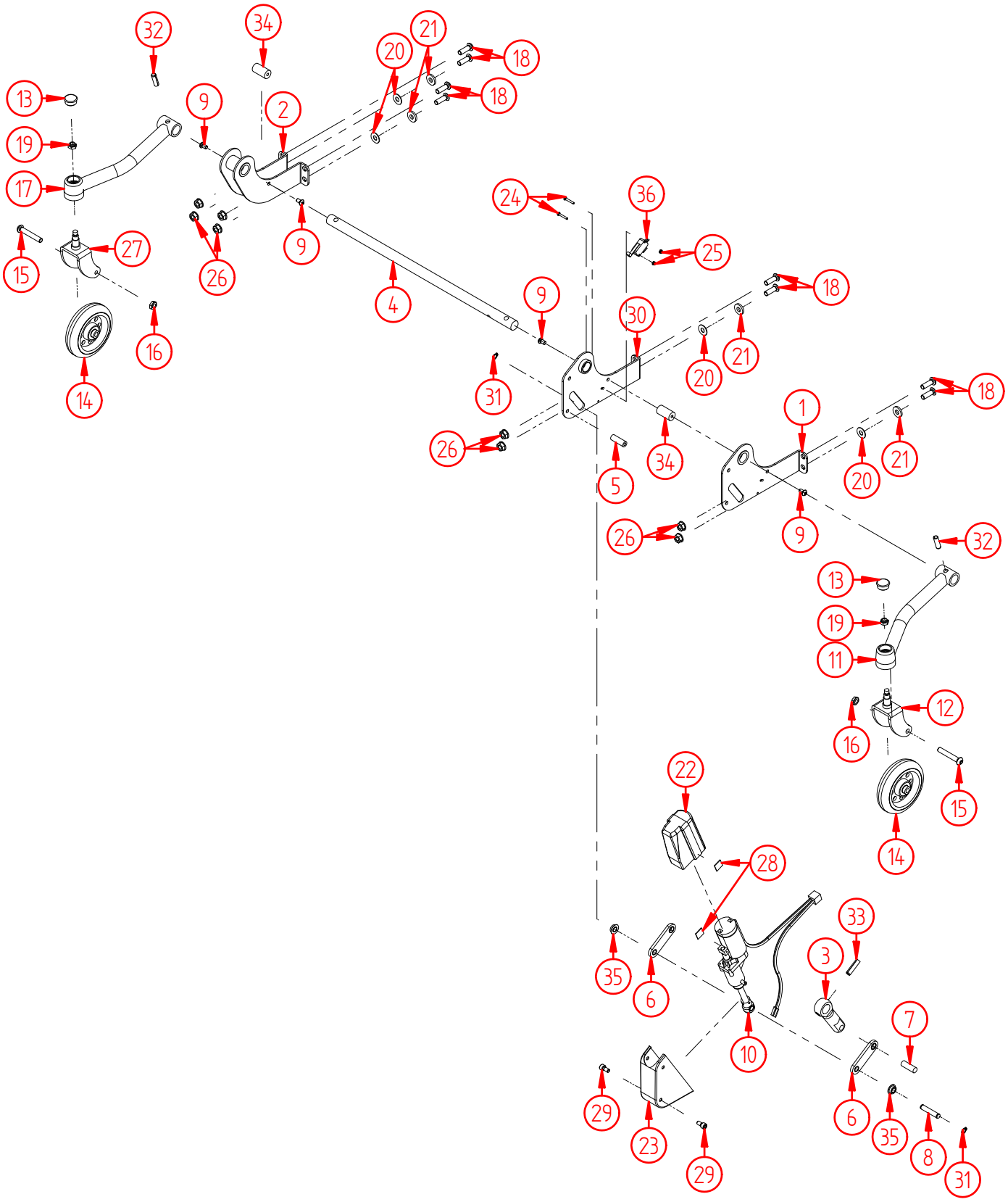

Product name:	**Support wheels, stand-up function, Balder F/J240 (37mm stroke)**
Product no:	**HP20071325**
Product reference:	**Balder F/J240**
Manufacturer:	Etac AS, www.etac.com
Revision:	**01.01.07**

Pos no.	Part no.	Qty	Description
1	11668	1	Bracket,left outer,wheels, standupf. (37mm stroke)
2	9569	1	Bracket, axel, right, supportwheels, standup funct.
3	9570	1	Link, actuator, supportwheels, standup funct.
4	9571	1	Axel, main, supportwheels, standup funct.
5	9572	1	Spacer, Ø10xM6x30mm
6	9940	2	Link,actuator,wheels, standupfunct.,from F0402056
7	9574	1	Axel, link, actuator, supportwheels, standup funct.
8	9939	1	Axel,actuator,wheels,standupfunct.,from F04022056
9	3727	4	Screw, hexagon socket pan head M6x10 ISO7380 Elzink 10,9
10	11670	1	Actuator, supportwheels, standup funct,(37mm stroke)
11	9577	1	Wheelarm, left, supportwheels, standup funct.
12	9578	1	Castor fork, left, supportwheels, standup funct., black
13	9560	2	Plate plug B23/20/10
14	9561	2	Wheel w/alu rim Ø100
15	1217	2	Screw, hexagon socket pan head M8x50 DIN 7380 Elzink 8,8
16	1337	2	Nut M8, narrow DIN 439 Elzink
17	9579	1	Wheelarm, right, supportwheels, standup funct.
18	1124	8	Screw, hexagon socket pan head M8x25 DIN 7380 Elzink 8,8
19	1070	2	Nut, nylock M8 DIN 985 El.zink 8,8
20	9581	4	Spacer, Ø20xØ8,5x1mm
21	9582	4	Spacer, Ø20xØ8,5x3mm
22	9589	1	Cover, actuator, supportwheels, standup funct.
23	9583	1	Cover, actuatorbracket, supportwheels, standup funct.
24	9558	2	Screw, cross slotted, pan head M3x20 DIN 7985 Elzink
25	1188	2	Nut, nylock M3 DIN 985 Elzink 8,8
26	1126	8	Nut, tensilock M8 DIN 6923 Goldfinish 8,8
27	9580	1	Castor fork, right, supportwheels, standup funct., black
28	1367	1	Velcro for fixation (L: 65mm)
29	4377	2	Screw, hexagon socket M6x12 DIN 912 Elzink 8,8
30	11669	1	Bracket,left inner,wheels, standupf. (37mm stroke)
31	1147	2	Circlip Ø8, outside DIN 471 Unplated
32	9927	2	Splint pipe, coil M8x26
33	9926	1	Splint pipe, coil M8x30
34	9575	2	Spacer, Ø16xM6x30mm
35	9928	2	Wheel, axel, actuator,support wheels, stand up funct.
36	10274	1	Microswitch, supportwheelsposition stand-up function

Part no.	Qty	Description
.	.	.
.	.	.
.	.	.
.	.	.

Product name:	**Support wheels, tilt-function, Balder F/J**
Product no:	**HP20071326**
Product reference:	**Balder F/J**
Manufacturer:	Etac AS, www.etac.com
Revision:	**11.12.08**

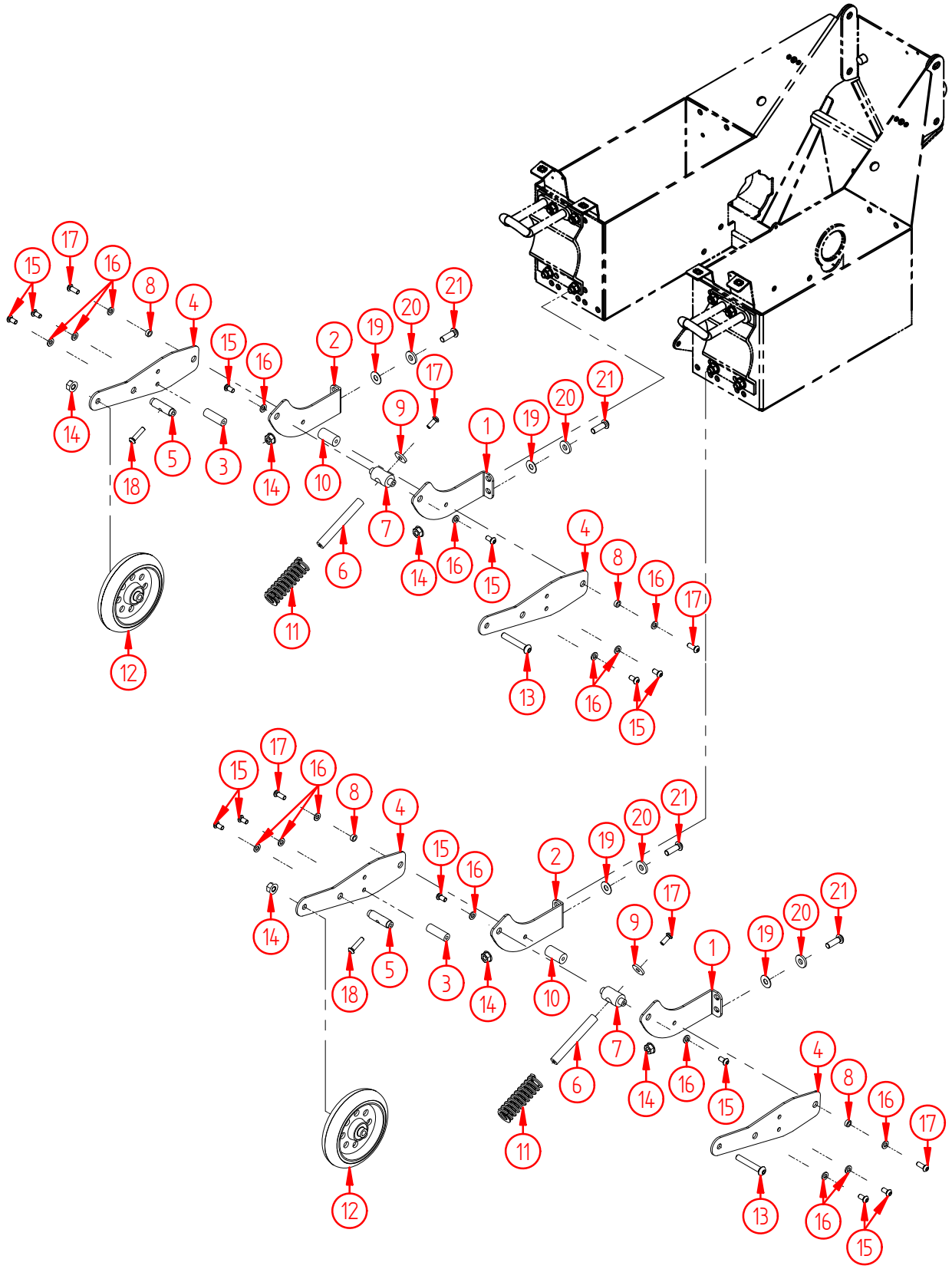

Product name:	**Support wheels, tilt-function, Balder F/J**
Product no:	**HP20071326**
Product reference:	**Balder F/J**
Manufacturer:	Etac AS, www.etac.com
Revision:	**11.12.08**

Pos no.	Part no.	Qty	Description
1	11672	2	Bracket, supportwheels, tilt, F/J:Left/L:Right
2	11673	2	Bracket, supportwheels, tilt, F/J:Right/L:Left
3	11676	2	Axel ø12mm, L:36,5mm, M6
4	11674	4	Platebracket, wheel, supportwheels, tilt F/L/J
5	11678	2	Axel, lower springfixation, supportwheel, tilt, F/L/J
6	11677	2	Axel ø12mm, L:92mm, M6
7	11679	2	Axel, upper springfixation, supportwheel, tilt, F/L/J
8	11675	4	Sleeve ø10/ø6,3, L:4,0mm
9	11681	2	Spacer, Ø20xØ6,4x3mm
10	9575	2	Spacer, Ø16xM6x30mm
11	11683	2	Spring, supportwheel, tilt, F/L/J
12	11682	2	Wheel w/alu rim Ø100
13	1217	2	Screw, hexagon socket pan head M8x50 DIN 7380 Elzink 8,8
14	1126	6	Nut, tensilock M8 DIN 6923 Goldfinish 8,8
15	1312	12	Screw, hexagon socket pan head M6x12 ISO7380 Elzink 10,9
16	1311	16	Washer M6 DIN 125 Elzink
17	1107	6	Screw, hexagon socket pan head M6x16 ISO7380 Elzink 10,9
18	1310	2	Screw, hexagon socket pan head M6x25 ISO7380 Elzink 10,9
19	9581	4	Spacer, Ø20xØ8,5x1mm
20	9582	4	Spacer, Ø20xØ8,5x3mm
21	1124	4	Screw, hexagon socket pan head M8x25 DIN 7380 Elzink 8,8

Part no.	Qty	Description
.	.	.
.	.	.
.	.	.
.	.	.

Product name:	**Support wheels, tilt-function, Balder L**
Product no:	**HP20071327**
Product reference:	**Balder L**
Manufacturer:	Etac AS, www.etac.com
Revision:	**11.12.08**

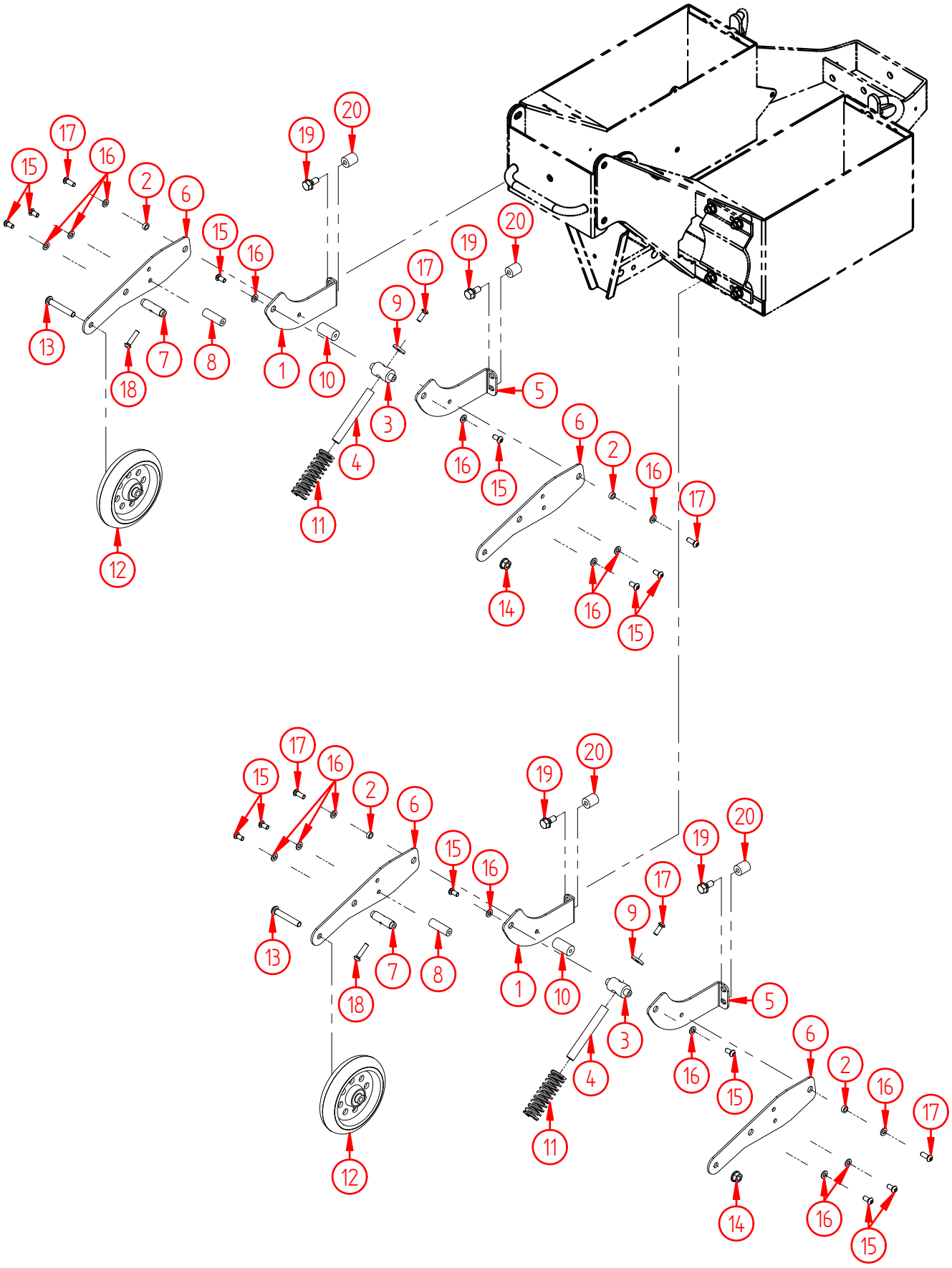

Product name:	**Support wheels, tilt-function, Balder L**
Product no:	**HP20071327**
Product reference:	**Balder L**
Manufacturer:	Etac AS, www.etac.com
Revision:	**11.12.08**

Pos no.	Part no.	Qty	Description
1	11673	2	Bracket, supportwheels, tilt, F/J:Right/L:Left
2	11675	4	Sleeve ø10/ø6,3, L:4,0mm
3	11679	2	Axel, upper springfixation, supportwheel, tilt, F/L/J
4	11677	2	Axel ø12mm, L:92mm, M6
5	11672	2	Bracket, supportwheels, tilt, F/J:Left/L:Right
6	11674	4	Platebracket, wheel, supportwheels, tilt F/L/J
7	11678	2	Axel, lower springfixation, supportwheel, tilt, F/L/J
8	11676	2	Axel ø12mm, L:36,5mm, M6
9	11681	2	Spacer, Ø20xØ6,4x3mm
10	9575	2	Spacer, Ø16xM6x30mm
11	11683	2	Spring, supportwheel, tilt, F/L/J
12	11682	2	Wheel w/alu rim Ø100
13	1217	2	Screw, hexagon socket pan head M8x50 DIN 7380 Elzink 8,8
14	1126	2	Nut, tensilock M8 DIN 6923 Goldfinish 8,8
15	1312	12	Screw, hexagon socket pan head M6x12 ISO7380 Elzink 10,9
16	1311	16	Washer M6 DIN 125 Elzink
17	1107	6	Screw, hexagon socket pan head M6x16 ISO7380 Elzink 10,9
18	1310	2	Screw, hexagon socket pan head M6x25 ISO7380 Elzink 10,9
19	4762	4	Screw, hexagon tensilock M8x16 DIN 6921 Goldfinish
20	11680	4	Sleeve ø16/M8 threads, L:18,5mm

Part no.	Qty	Description
.	.	.
.	.	.
.	.	.
.	.	.

Product name:	**Cover, chassis, Dzus, Balder F270**
Product no:	**HP20071338**
Product reference:	**Balder F**
Manufacturer:	Etac AS, www.etac.com
Revision:	**01.04.08**

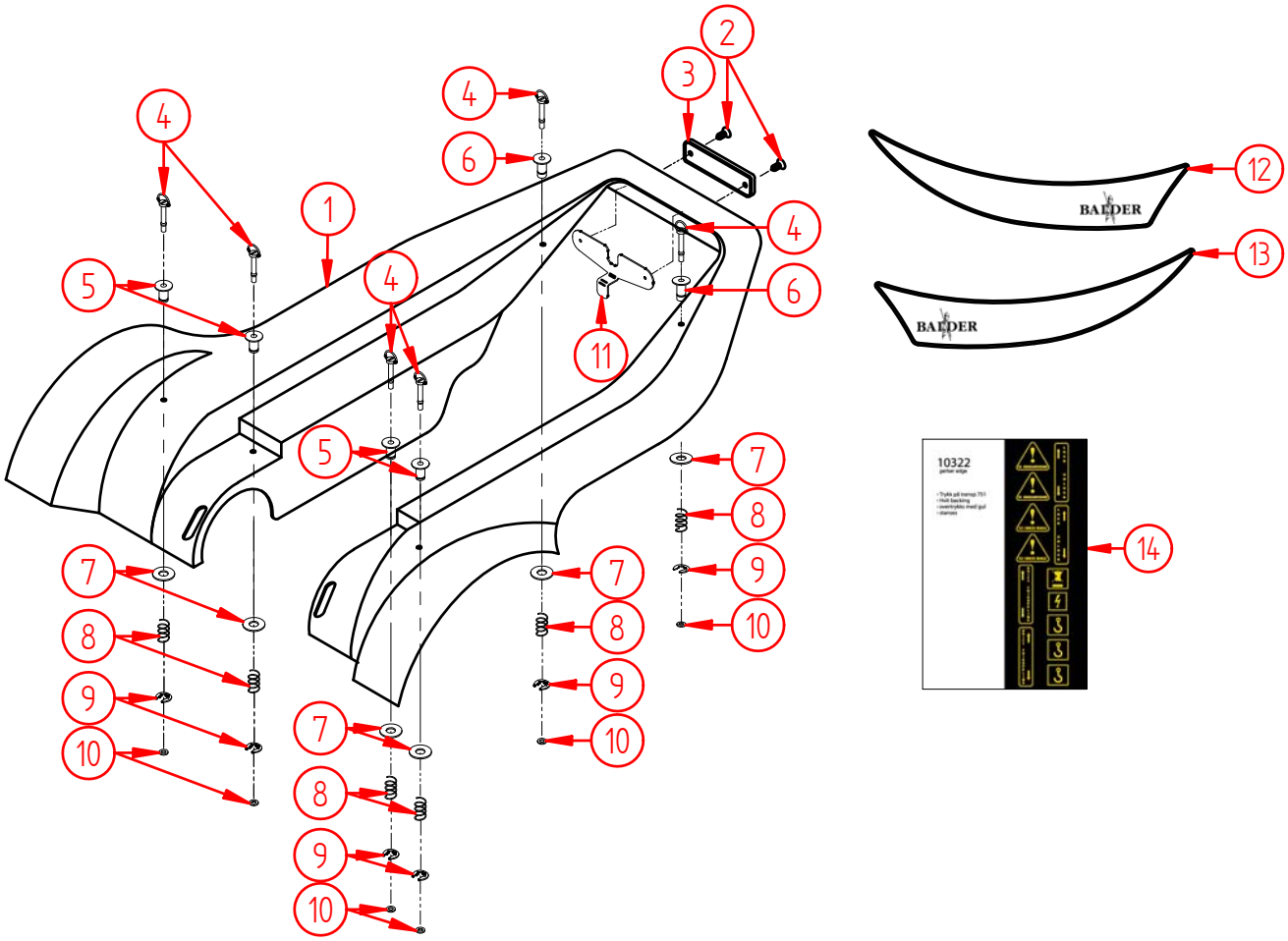

Product name:	**Cover, chassis, Dzus, Balder F270**
Product no:	**HP20071338**
Product reference:	**Balder F**
Manufacturer:	Etac AS, www.etac.com
Revision:	**01.04.08**

Pos no.	Part no.	Qty	Descrition
1	10734	1	Body Moulding Balder F/J, (fra chno. 05052670)
2	10733	2	Plate Screw, 4,0x20, Wupo Elzink
3	3840	1	Reflex Balder F/L
4	10699	6	Lock stud, dzus, quarter-turn
5	10718	4	Springwasher, for dzus, L:16mm
6	10719	2	Springwasher, for dzus, L:19mm
7	1064	6	Washer M8x20, Din 522 Elzink
8	10695	6	Spring SF-TFR 0,75x9x20
9	10696	6	Clip, RS ø7mm DIN 6799 SS1770
10	10693	6	Washer, nylon ø8/ø4,3x1mm
11	10720	1	Bracket, fixing rear light Balder F/J
12	12235	1	Label, Balder F, red, body moulding, right side
13	12237	1	Label, Balder F, red, body moulding, left side
14	10322	1	Labelset, Balder warning, transparent

Part no.	Qty	Description
.	.	.
.	.	.
.	.	.
.	.	.

Product name:	**Cover, back-frame, Balder F270**
Product no:	**HP20071339**
Product reference:	**Balder F**
Manufacturer:	Etac AS, www.etac.com
Revision:	**23.09.10**

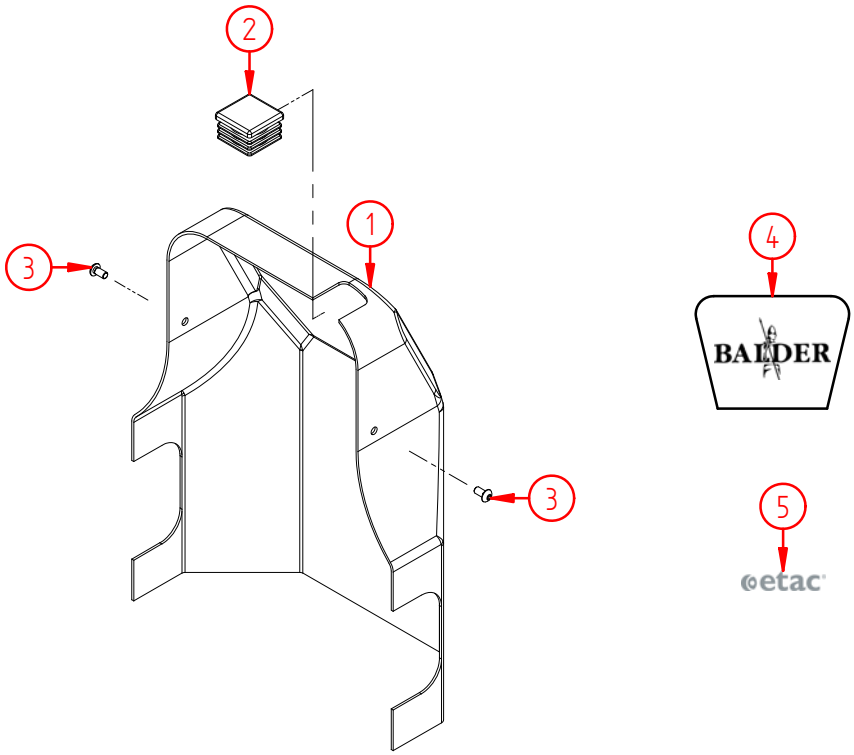

Product name:	**Cover, back-frame, Balder F270**
Product no:	**HP20071339**
Product reference:	**Balder F**
Manufacturer:	Etac AS, www.etac.com
Revision:	**23.09.10**

Pos no.	Part no.	Qty	Description
1	1118	1	Cover for back Balder F/L/J240
2	12429	1	Ribbed plastic insert 35x35, black, square
3	4402	2	Screw, hexagon socket pan head M5x10 ISO 7380 Elzink 10,9
4	12233	1	Label, red, Balder F, rear cover
5	12894	1	Label, ETAC logo, 70x17,5mm, silver

Alternative til 1118: 10740 - Cover for back Balder F/L (without cut forarmrests)

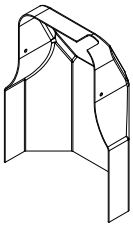

02. Functions

Product name:	**Powered seat back function Balder F/L/J240**
Product no:	**HP20071009**
Product reference:	**Balder F/L**
Manufacturer:	Etac AS, www.etac.com
Revision:	**01.01.07**

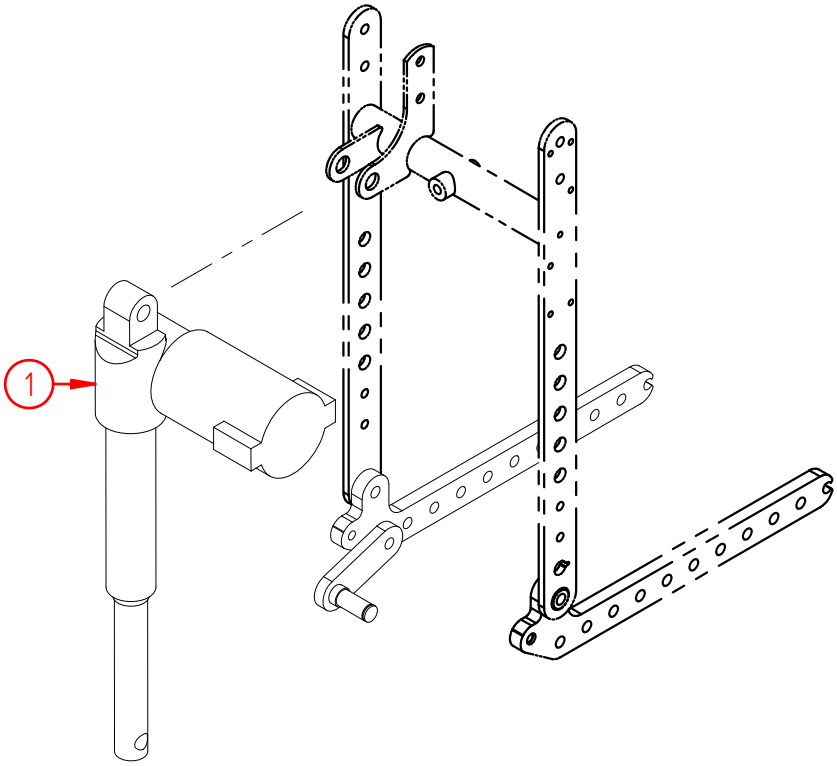

Product name:	**Manual seat back function Balder F/L**
Product no:	**HP20071010**
Product reference:	**Balder F/L**
Manufacturer:	Etac AS, www.etac.com
Revision:	**01.01.07**

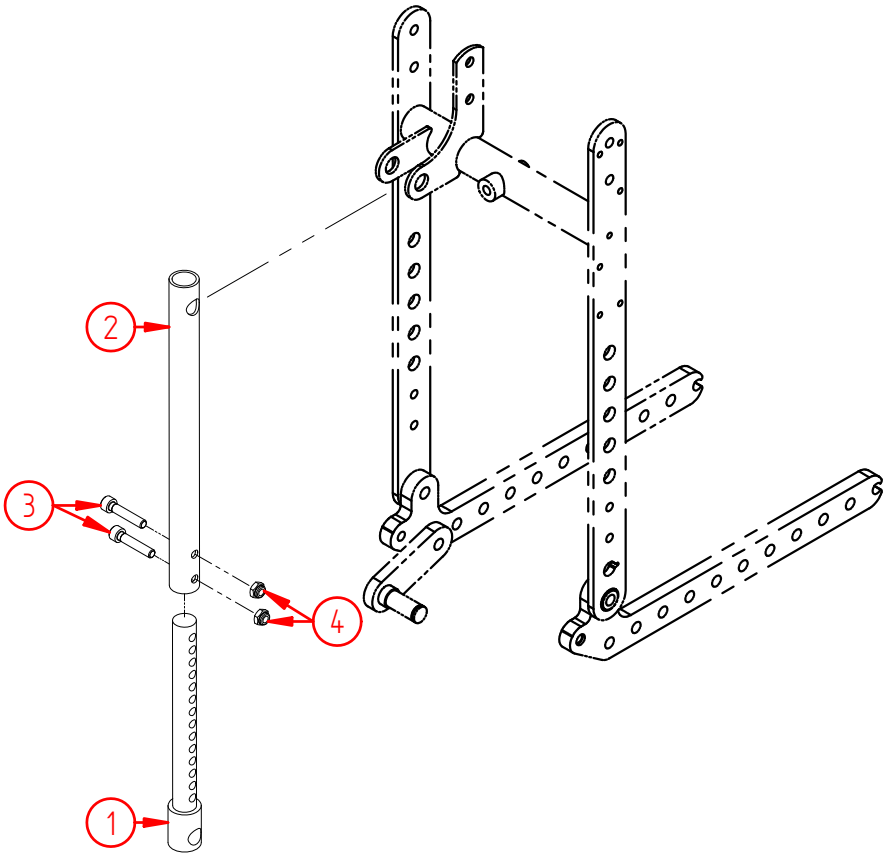

Product name:	**Powered seat back function Balder F/L/J240**
Product no:	**HP20071009**
Product reference:	**Balder F/L**
Manufacturer:	Etac AS, www.etac.com
Revision:	**01.01.07**

Pos no.	Part no.	Qty	Description
1	1062	1	Actuator for the back incl. noise suppression

Product name:	**Manual seat back function Balder F/L**
Product no:	**HP20071010**
Product reference:	**Balder F/L**
Manufacturer:	Etac AS, www.etac.com
Revision:	**01.01.07**

Pos no.	Part no.	Qty	Description
1	3738	1	Bar for manuel back and tilt F/L
2	3739	1	Tube for manual back and tilt
3	3740	2	Screw, hexagon socket M6x30 DIN 912 Elzink 8,8
4	1157	2	Nut, nylock M6 DIN 985 Elzink 8,8

Product name:	**Gas shock seat back function, Recaro, Balder F/L**
Product no:	**HP20071011**
Product reference:	**Balder F/L**
Manufacturer:	Etac AS, www.etac.com
Revision:	**01.01.07**

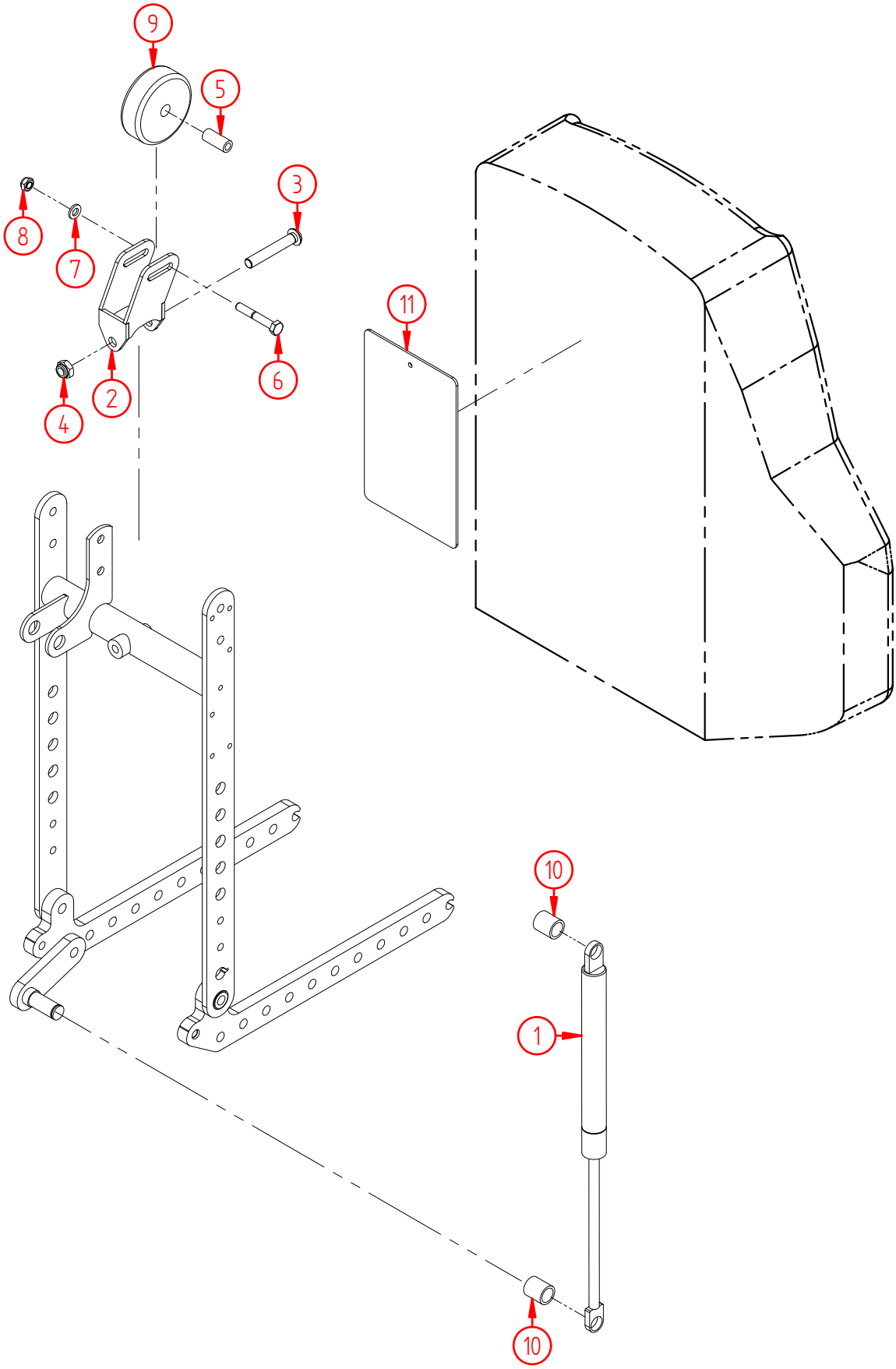

Product name:	**Gas shock seat back function, Recaro, Balder F/L**
Product no:	**HP20071011**
Product reference:	**Balder F/L**
Manufacturer:	Etac AS, www.etac.com
Revision:	**01.01.07**

Pos no.	Part no.	Qty	Description
1	3755	1	Gas Shock for seat back, universal seat
2	4148	1	Bracket, wheel, Recaro
3	1217	1	Screw, hexagon socket pan head M8x50 DIN 7380 Elzink 8,8
4	1070	1	Nut, nylock M8 DIN 985 El.zink 8,8
5	4146	1	Sleeve, Back wheel Recaro
6	000362	1	Screw, hexagon M6x40 DIN 931 Elzink 8,8
7	1311	1	Washer M6 DIN 125 Elzink
8	1157	1	Nut, nylock M6 DIN 985 Elzink 8,8
9	4147	1	Wheel for back, Recaro
10	4149	2	Sleeve, Gas Shock for back
11	4144	1	Plate for seatback, universalseat

Part no.	Qty	Description
.	.	.
.	.	.
.	.	.
.	.	.

Product name:	**Powered seat back function Balder J**
Product no:	**HP20071012**
Product reference:	**Balder J**
Manufacturer:	Etac AS, www.etac.com
Revision:	**01.01.07**

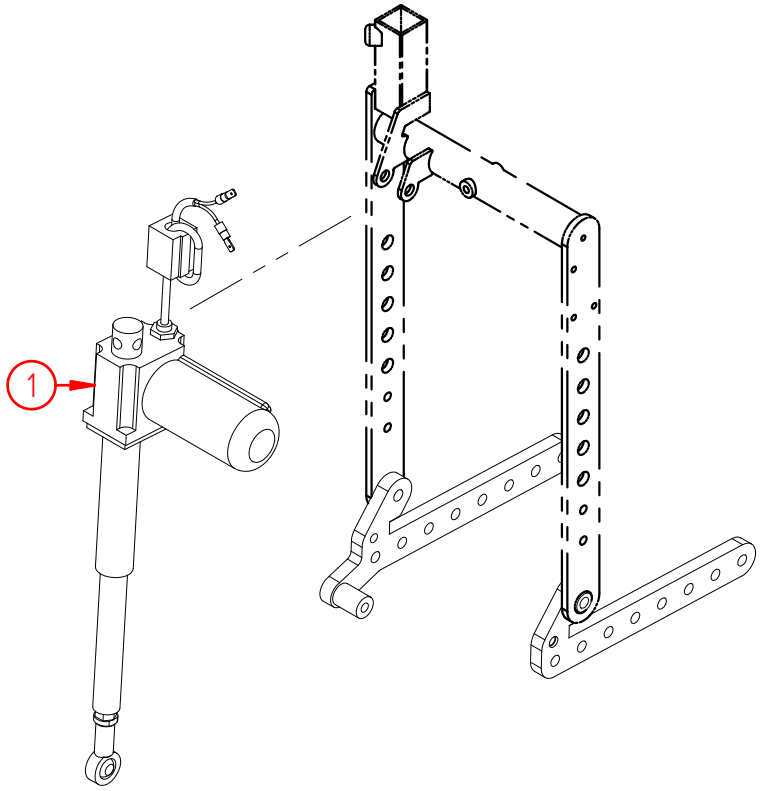

Product name:	**Manual seat back function Balder J**
Product no:	**HP20071013**
Product reference:	**Balder J**
Manufacturer:	Etac AS, www.etac.com
Revision:	**01.01.07**

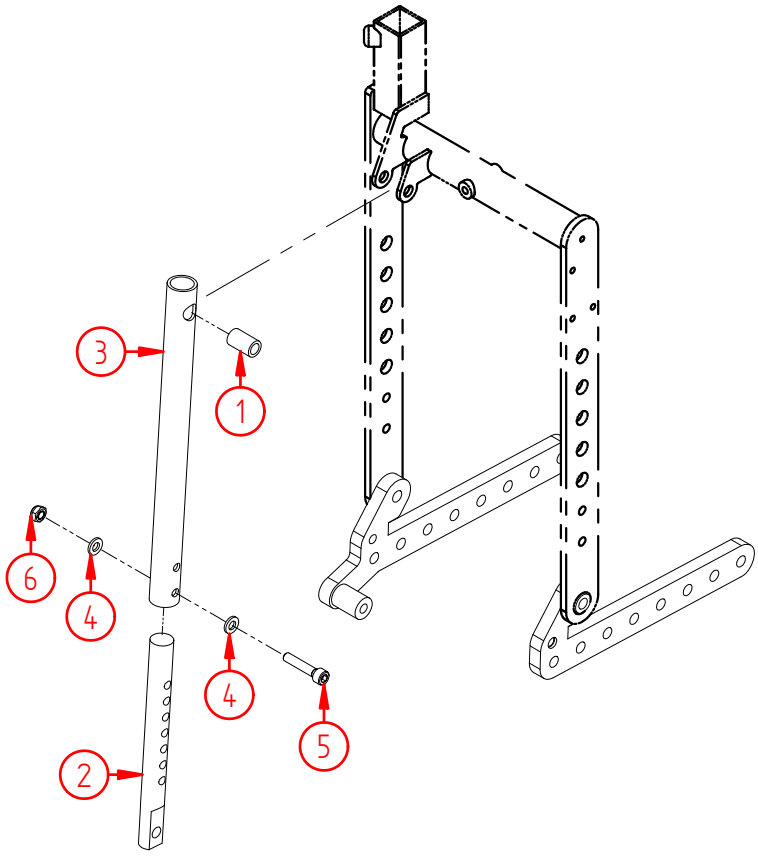

Product name:	**Powered seat back function Balder J**
Product no:	**HP20071012**
Product reference:	**Balder J**
Manufacturer:	Etac AS, www.etac.com
Revision:	**01.01.07**

Pos no.	Part no.	Qty	Description
1	10074	1	Actuator, seatback Junior 230/235

Product name:	**Manual seat back function Balder J**
Product no:	**HP20071013**
Product reference:	**Balder J**
Manufacturer:	Etac AS, www.etac.com
Revision:	**01.01.07**

Pos no.	Part no.	Qty	Description
1	10072	1	Sleeve, Ø12/Ø8x20mm
2	10071	1	Bar for man.footrest and man. back, Junior 230/235
3	3739	1	Tube for manual back and tilt
4	1311	2	Washer M6 DIN 125 Elzink
5	3740	1	Screw, hexagon socket M6x30 DIN 912 Elzink 8,8
6	1157	1	Nut, nylock M6 DIN 985 Elzink 8,8

Product name:	**Powered tilt function 45/15 degrees, Balder F/L/J**
Product no:	**HP20071014**
Product reference:	**Balder F/L/J**
Manufacturer:	Etac AS, www.etac.com
Revision:	**01.01.07**

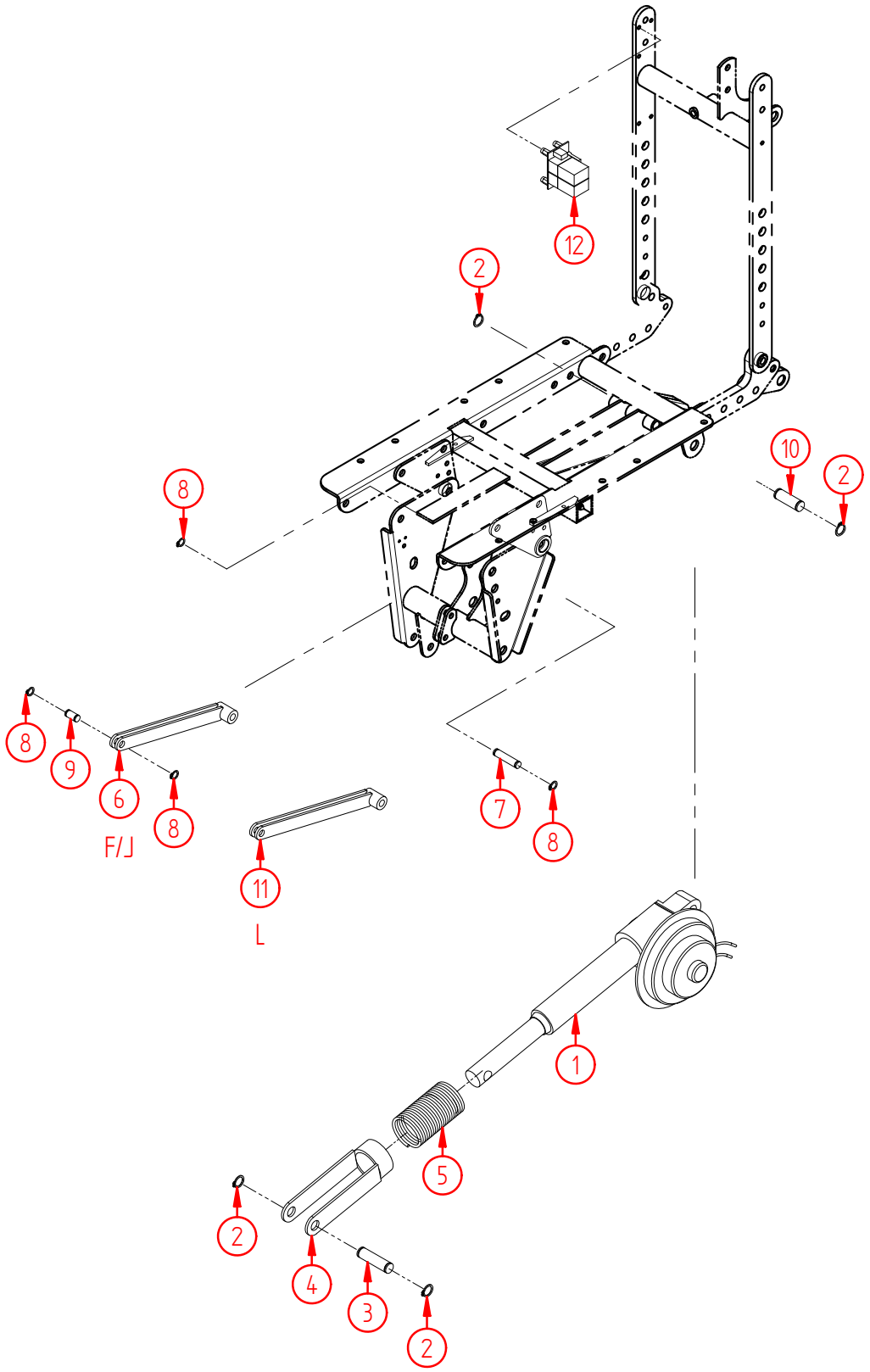

Product name:	**Powered tilt function 45/15 degrees, Balder F/L/J**
Product no:	**HP20071014**
Product reference:	**Balder F/L/J**
Manufacturer:	Etac AS, www.etac.com
Revision:	**01.01.07**

Pos no.	Part no.	Qty	Description
1	1041	1	Actuator for the tilt, F/L/J, 45/15 angle
2	1043	4	Circlip Ø12, outside DIN 471 Unplated
3	1347	1	Axle, tilt/standup actuator, front
4	1349	1	Sleeve for the tilt-actuator spring
5	1348	1	Spring 6,3x40x90-6285 for tilt/standup aktuator
6	1145	1	Tiltbar footrest F
7	3728	1	Axle tilt bar, long
8	1147	4	Circlip Ø8, outside DIN 471 Unplated
9	4316	1	Axel, tiltbar w/standup function
10	1076	1	Axle seatback actuator, upper, F/L, Junior 240
11	4886	1	Tiltbar, footrest, tilt-function L
12	1382	1	Relay for tilt

Part no.	Qty	Description
.	.	.
.	.	.
.	.	.
.	.	.

Product name:	**Manual tilt function 45/15 degrees, Balder F/L/J**
Product no:	**HP20071015**
Product reference:	**Balder F/L/J**
Manufacturer:	Etac AS, www.etac.com
Revision:	**01.01.07**

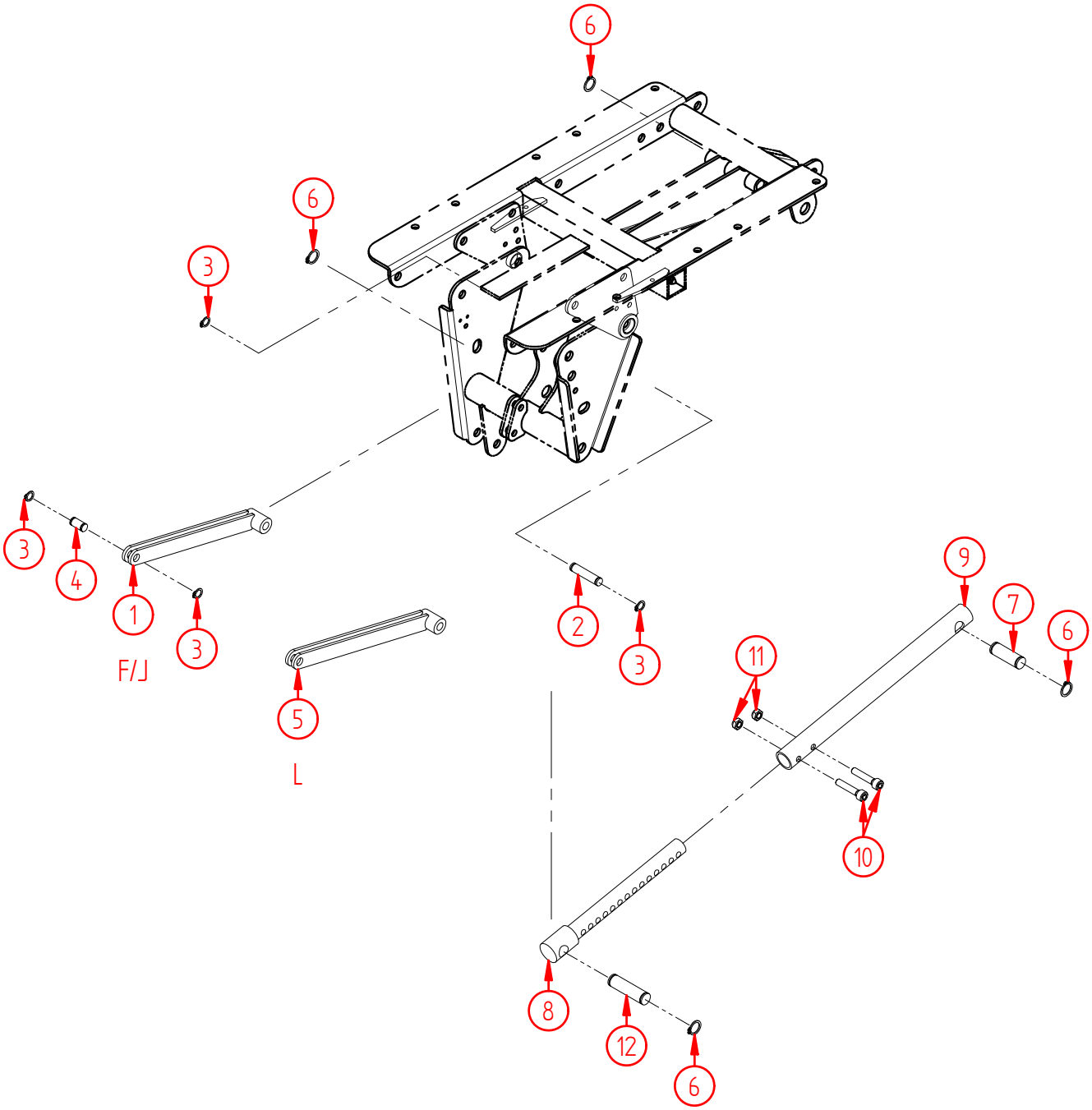

Product name:	**Manual tilt function 45/15 degrees, Balder F/L/J**
Product no:	**HP20071015**
Product reference:	**Balder F/L/J**
Manufacturer:	Etac AS, www.etac.com
Revision:	**01.01.07**

Pos no.	Part no.	Qty	Description
1	1145	1	Tiltbar footrest F
2	3728	1	Axle tilt bar, long
3	1147	4	Circlip Ø8, outside DIN 471 Unplated
4	4316	1	Axel, tiltbar w/standup function
5	4886	1	Tiltbar, footrest, tilt-function L
6	1043	4	Circlip Ø12, outside DIN 471 Unplated
7	1076	1	Axle seatback actuator, upper, F/L, Junior 240
8	3738	1	Bar for manuel back and tilt F/L
9	3739	1	Tube for manual back and tilt
10	3740	2	Screw, hexagon socket M6x30 DIN 912 Elzink 8,8
11	1157	2	Nut, nylock M6 DIN 985 Elzink 8,8
12	1347	1	Axle, tilt/standup actuator, front

Part no.	Qty	Description
.	.	.
.	.	.
.	.	.
.	.	.

Product name:	**Powered stand-up function, Balder F/J240**
Product no:	**HP20071016**
Product reference:	**Balder F/J240**
Manufacturer:	Etac AS, www.etac.com
Revision:	**01.01.07**

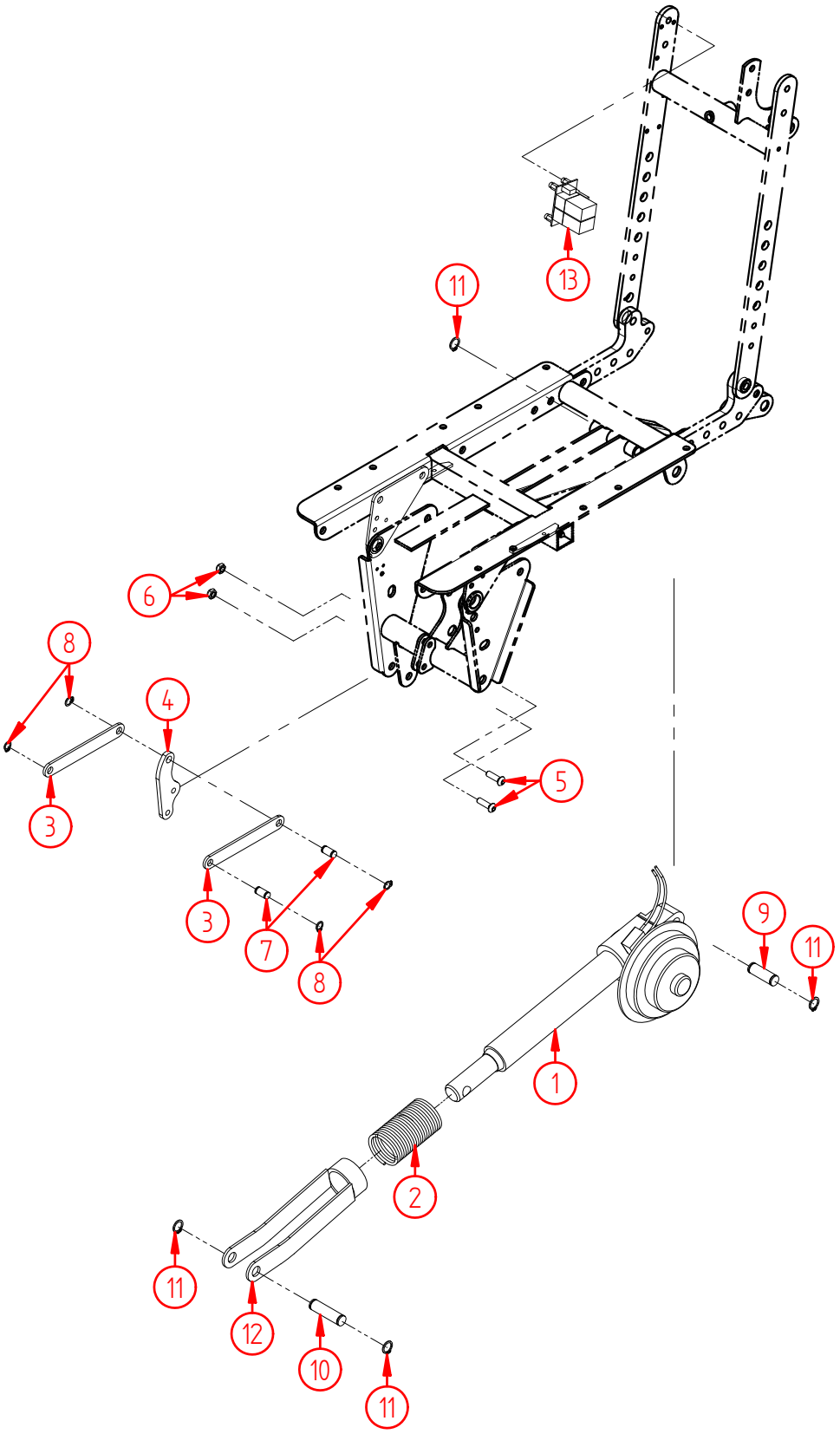

Product name:	**Powered stand-up function, Balder F/J240**
Product no:	**HP20071016**
Product reference:	**Balder F/J240**
Manufacturer:	Etac AS, www.etac.com
Revision:	**01.01.07**

Pos no.	Part no.	Qty	Description
1	3746	1	Actuator for the stand-up function
2	1348	1	Spring 6,3x40x90-6285 for tilt/standup aktuator
3	4199	2	Tiltbar footrest stand-up function F/L
4	4200	1	Sheet bracket for footrest, stand-up function
5	1346	2	Screw, hexagon socket pan head M6x20 DIN 7380 Elzink 10,9
6	1157	2	Nut, nylock M6 DIN 985 Elzink 8,8
7	4316	2	Axel, tiltbar w/standup function
8	1147	4	Circlip Ø8, outside DIN 471 Unplated
9	1076	1	Axle seatback actuator, upper, F/L, Junior 240
10	1347	1	Axle, tilt/standup actuator, front
11	1043	4	Circlip Ø12, outside DIN 471 Unplated
12	4013	1	Sleeve for the stand up-actuator spring
13	1382	1	Relay for tilt

Part no.	Qty	Description
.	.	.
.	.	.
.	.	.
.	.	.

Product name:	**Powered tilt function 45/8 degrees, Balder F/L/J**
Product no:	**HP20071324**
Product reference:	**Balder F/L/J**
Manufacturer:	Etac AS, www.etac.com
Revision:	**01.01.07**

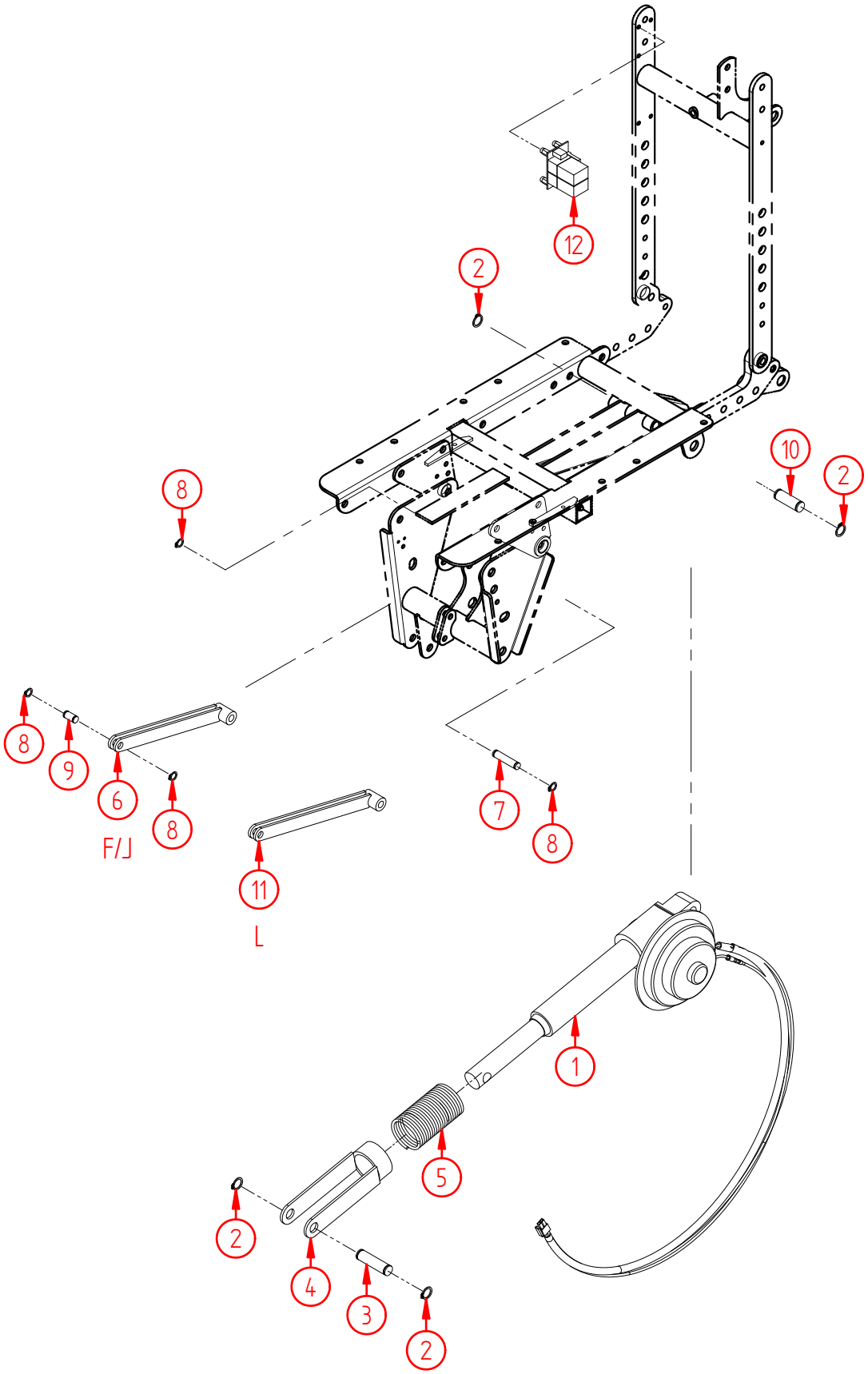

Product name:	**Powered tilt function 45/8 degrees, Balder F/L/J**
Product no:	**HP20071324**
Product reference:	**Balder F/L/J**
Manufacturer:	Etac AS, www.etac.com
Revision:	**01.01.07**

Pos no.	Part no.	Qty	Description
1	11666	1	Actuator for the tilt, F/L/J, 45/8 angle
2	1043	4	Circlip Ø12, outside DIN 471 Unplated
3	1347	1	Axle, tilt/standup actuator, front
4	1349	1	Sleeve for the tilt-actuator spring
5	1348	1	Spring 6,3x40x90-6285 for tilt/standup aktuator
6	1145	1	Tiltbar footrest F
7	3728	1	Axle tilt bar, long
8	1147	4	Circlip Ø8, outside DIN 471 Unplated
9	4316	1	Axel, tiltbar w/standup function
10	1076	1	Axle seatback actuator, upper, F/L, Junior 240
11	4886	1	Tiltbar, footrest, tilt-function L
12	1382	1	Relay for tilt

Part no.	Qty	Description
.	.	.
.	.	.
.	.	.
.	.	.

03. Steering system and remotes

Product name:	**Control unit, Sip and puff**
Product no:	**HP20071062**
Product reference:	**Balder F/L**
Manufacturer:	Etac AS, www.etac.com
Revision:	**21.02.11**

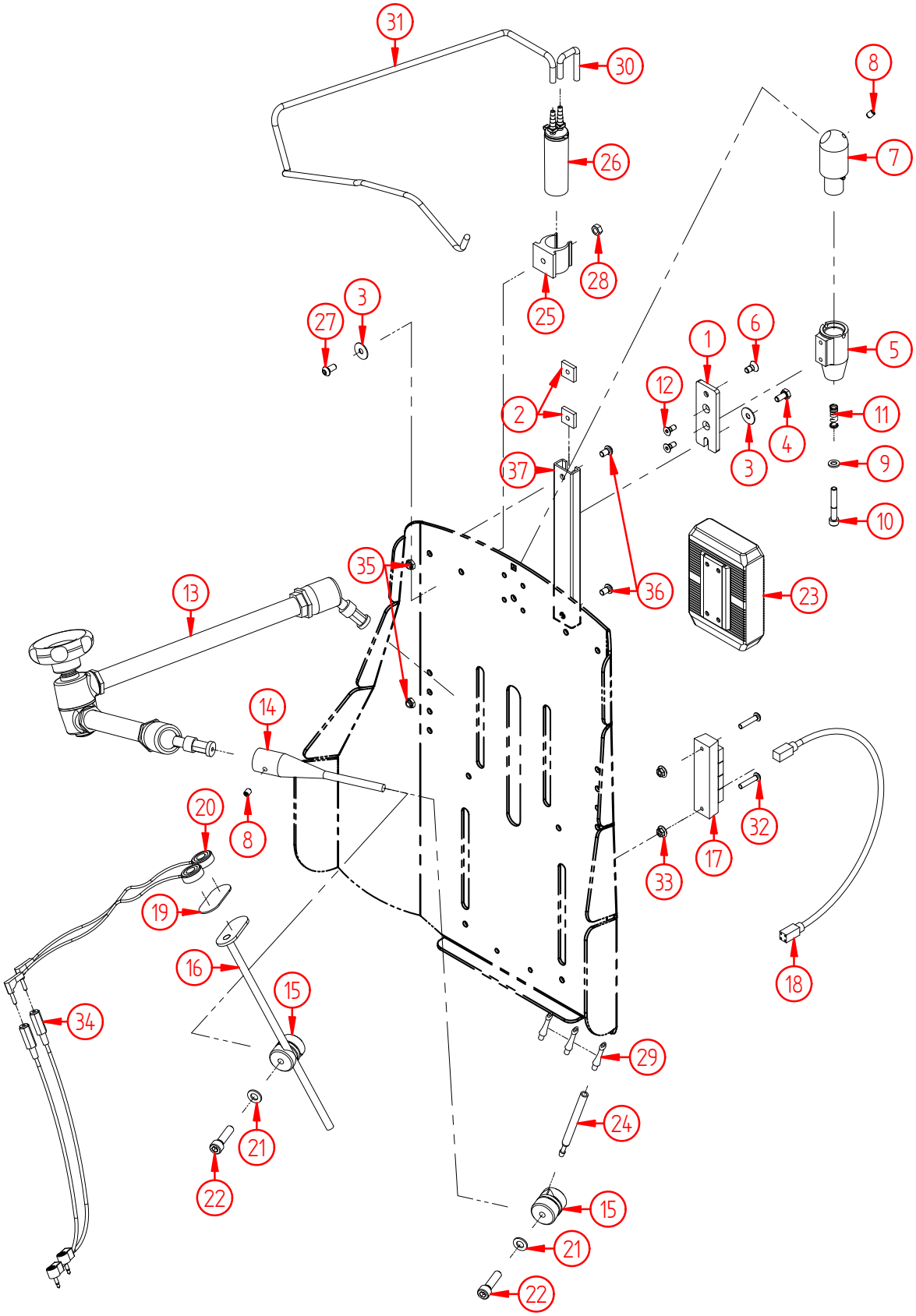

Product name:	**Control unit, Sip and puff**
Product no:	**HP20071062**
Product reference:	**Balder F/L**
Manufacturer:	Etac AS, www.etac.com
Revision:	**21.02.11**

Pos no.	Part no.	Qty	Description
1	11805	1	Nutplate, C-rail, special control unit
2	1276	2	Nut 18x18x4xM6, square, steel
3	1338	2	Washer M6x20 DIN 522 Elzink
4	1210	1	Screw, hexagon M6x12 DIN 933 Elzink 8,8
5	11806	1	Boss, lower, flex arm, special control unit
6	1308	1	Screw, hexagon socket countersunk M6x12 DIN 7991 Elzink 8,8
7	11807	1	Boss, upper, flex arm, special control unit
8	1128	2	Screw, hexagon set, M6x8 DIN 916 Unplated
9	1311	1	Washer M6 DIN 125 Elzink
10	000526	1	Screw, hexagon socket M6x40 DIN 912 Elzink 8,8
11	11817	1	Spring SF-TFR 1x7x25
12	000349	2	Screw, hexagon socket countersunk M5x12 DIN 7991 Elzink 8,8
13	11811	1	Flexibel arm, special control unit
14	11812	1	Bar, fixation control unit, flex arm
15	11816	2	Clamping joint for 8mm bar, KIPP
16	11813	1	Bar, fixation minicup switches, flex arm
17	1295	1	Switch box DX-SKT-X4
18	4490	1	Cable DX-BUS 0,3 M
19	1367	1	Velcro for fixation (L: 65mm)
20	9320	2	Microswitch, minicup
21	1340	2	Washer M8 DIN 125 Elzink
22	4896	2	Screw, hexagon socket M8x30 DIN 912 Elzink 8,8
23	1266	1	Sip and Puff Interface, DX-SNP
24	11824	1	Tubing, mouthpiece, sip and puff
25	1277	1	Plastic clip Dia. 25
26	11822	1	Salavi trap, sip and puff Gewa
27	1312	1	Screw, hexagon socket pan head M6x12 ISO7380 Elzink 10,9
28	1089	1	Nut M6 DIN 934 Elzink
29	11821	3	Mouthpiece, sip and puff
30	11823	1	Tubing 0,6/04mm, sip and puff unit, GEWA (0,8m)
31	11823	1	Tubing 0,6/04mm, sip and puff unit, GEWA (1,2m)
32	4226	2	Screw, hexagon socket pan head M5x25 DIN 7380 Elzink 10,9
33	1189	2	Nut, tensilock M5 DIN 6923 Goldfinish 8.8
34	11231	2	Extension cable, 3,5 jack mono, male/female, L:120cm
35	1157	2	Nut, nylock M6 DIN 985 Elzink 8,8
36	3727	2	Screw, hexagon socket pan head M6x10 ISO7380 Elzink 10,9
37	10742	1	Rail, seat back, Junior 240- F/L C03VA

Part no.	Qty	Description
.	.	.
.	.	.
.	.	.
.	.	.

Product name:	**Control unit, Chin control**
Product no:	**HP20071063**
Product reference:	**Balder F/L**
Manufacturer:	Etac AS, www.etac.com
Revision:	**21.02.11**

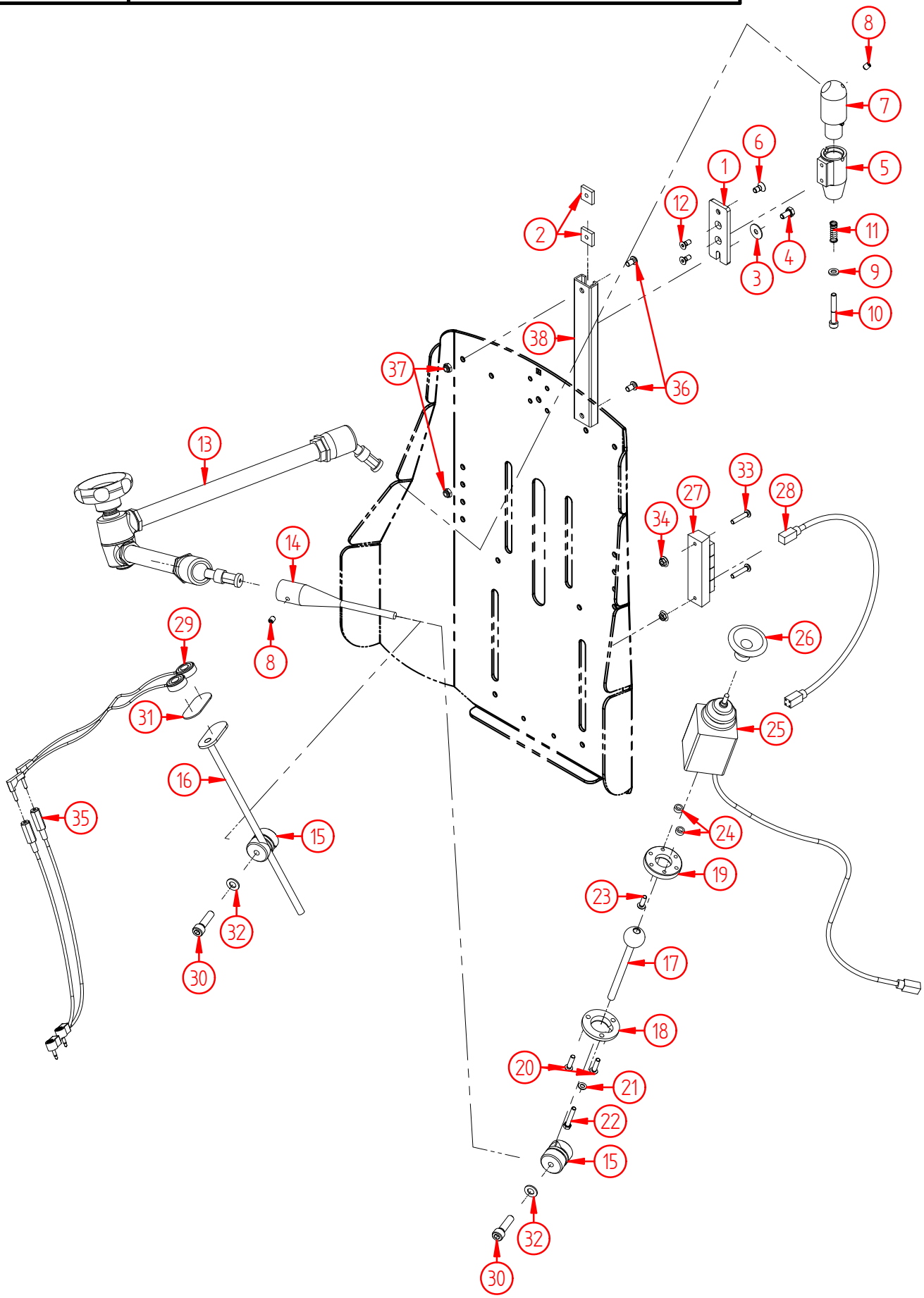

Product name:	**Control unit, Chin control**
Product no:	**HP20071063**
Product reference:	**Balder F/L**
Manufacturer:	Etac AS, www.etac.com
Revision:	**21.02.11**

Pos no.	Part no.	Qty	Description
1	11805	1	Nutplate, C-rail, special control unit
2	1276	2	Nut 18x18x4xM6, square, steel
3	1338	1	Washer M6x20 DIN 522 Elzink
4	1210	1	Screw, hexagon M6x12 DIN 933 Elzink 8,8
5	11806	1	Boss, lower, flex arm, special control unit
6	1308	1	Screw, hexagon socket countersunk M6x12 DIN 7991 Elzink 8,8
7	11807	1	Boss, upper, flex arm, special control unit
8	1128	2	Screw, hexagon set, M6x8 DIN 916 Unplated
9	1311	1	Washer M6 DIN 125 Elzink
10	000526	1	Screw, hexagon socket M6x40 DIN 912 Elzink 8,8
11	11817	1	Spring SF-TFR 1x7x25
12	000349	2	Screw, hexagon socket countersunk M5x12 DIN 7991 Elzink 8,8
13	11811	1	Flexibel arm, special control unit
14	11812	1	Bar, fixation control unit, flex arm
15	11816	2	Clamping joint for 8mm bar, KIPP
16	11813	1	Bar, fixation minicup switches, flex arm
17	11814	1	Bar, fixation RJM joystick, flex arm
18	3045-6	1	Clamping ring
19	1601	1	Ring for fixing of balljoint, steel
20	4225	2	Screw, hexagon socket pan head M5x20 DIN 7380 Elzink 10,9
21	000648	1	Washer M5 DIN 125
22	2733	1	Screw, hexagon M5x30 DIN 933 Elzink 8,8
23	4401	1	Screw, hexagon socket pan head M5x16 ISO7380 Elzink 10,9
24	11675	2	Sleeve ø10/ø6,3, L:4,0mm
25	1297	1	Joystick, DX-RJM
26	4793	1	Joystick knob, Chin Cup, GJS26819/GJS0029
27	1295	1	Switch box DX-SKT-X4
28	4490	1	Cable DX-BUS 0,3 M
29	9320	2	Microswitch, minicup
30	4896	2	Screw, hexagon socket M8x30 DIN 912 Elzink 8,8
31	1367	1	Velcro for fixation (L: 65mm)
32	1340	2	Washer M8 DIN 125 Elzink
33	4226	2	Screw, hexagon socket pan head M5x25 DIN 7380 Elzink 10,9
34	1189	2	Nut, tensilock M5 DIN 6923 Goldfinish 8.8
35	11231	2	Extension cable, 3,5 jack mono, male/female, L:120cm
36	3727	2	Screw, hexagon socket pan head M6x10 ISO7380 Elzink 10,9
37	1157	2	Nut, nylock M6 DIN 985 Elzink 8,8
38	10742	1	Rail, seat back, Junior 240- F/L C03VA

Part no.	Qty	Description
.	.	.
.	.	.
.	.	.
.	.	.

Product name:	**Attendant control, Hand support**
Product no:	**HP20071065**
Product reference:	**Balder F/L**
Manufacturer:	Etac AS, www.etac.com
Revision:	**28.10.10**

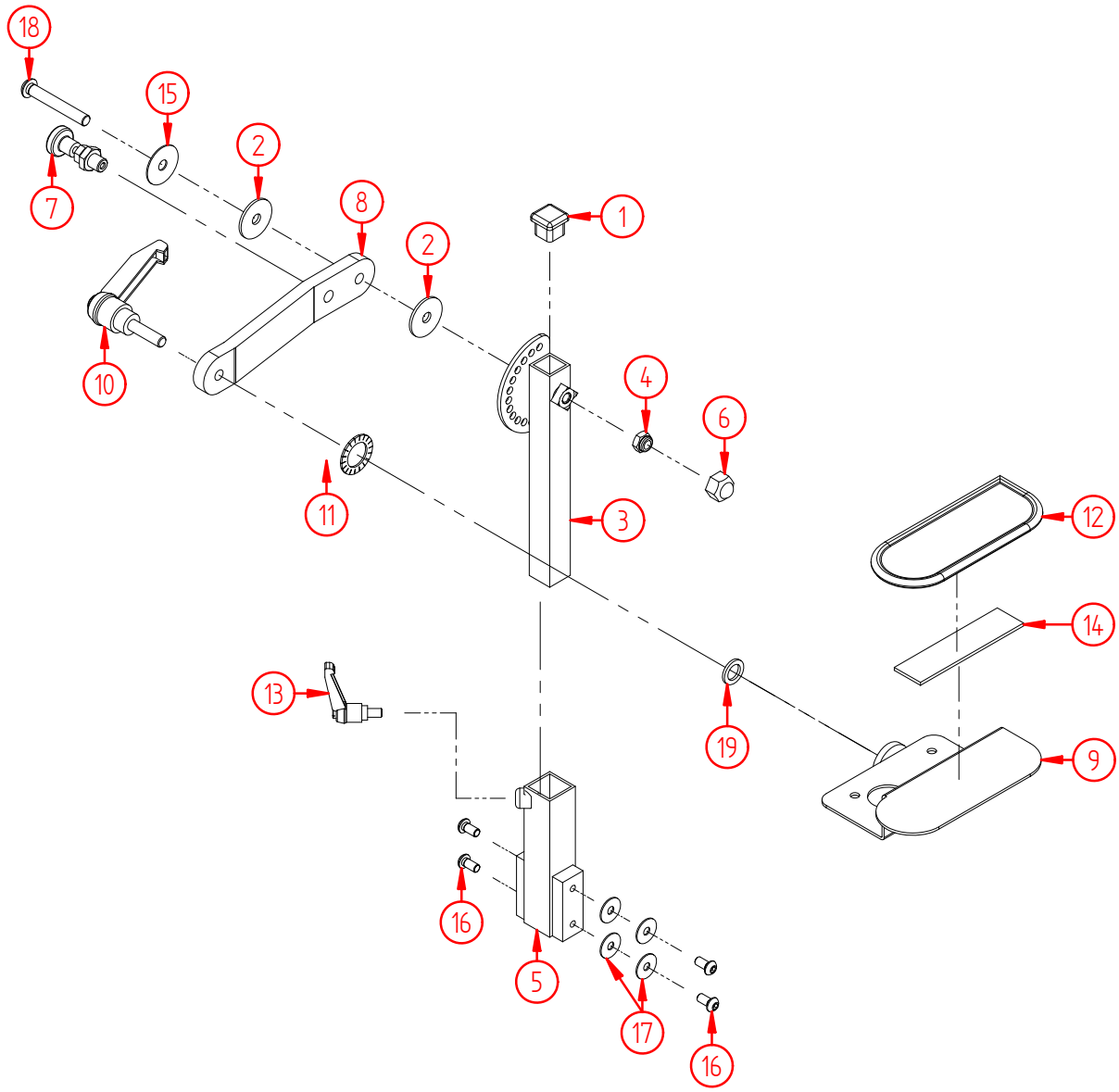

Product name:	**Attendant control, Hand support**
Product no:	**HP20071065**
Product reference:	**Balder F/L**
Manufacturer:	Etac AS, www.etac.com
Revision:	**28.10.10**

Pos no.	Part no.	Qty	Description
1	2045	1	Ribbed Plastic Insert20x20
2	4661	2	Washer, black T30/2/8
3	4667	1	Main arm for dual attendant
4	1070	1	Nut, nylock M8 DIN 985 El.zink 8,8
5	1289	1	Mounting bracket
6	3759	1	Nut cover BK13 M8
7	4506-6	1	Fixation bolt M10x1,0
8	10177	1	Arm for attendant control w/hand support
9	9399	1	Main bracket, attendant control w/hand support
10	1293	1	Locking handle WN500 65-M8x35
11	445242	1	Toothed plate19x30x1,4 DIN 6798 El.zink
12	9397	1	Pad, ACU1 fitted to back
13	000294	1	Locking handle, M6x16, APS
14	3832	0,12m	Velcro, Klettostar, hook 50mm black, glue 22
15	000447	1	Washer M8x30 DIN 522 Elzink
16	1312	4	Screw, hexagon socket pan head M6x12 ISO7380 Elzink 10,9
17	1338	4	Washer M6x20 DIN 522 Elzink
18	9419	1	Screw, hexagon socket pan head M8x55 DIN 7380 Elzink 10,9
19	485007	1	Adapter ring toothwasher, attendant control w/hand support

Part no.	Qty	Description
.	.	.
.	.	.
.	.	.
.	.	.

Product name:	**Attendant control, Emergency stop switch**
Product no:	**HP20071066**
Product reference:	**Balder F/L**
Manufacturer:	Etac AS, www.etac.com
Revision:	**29.05.09**

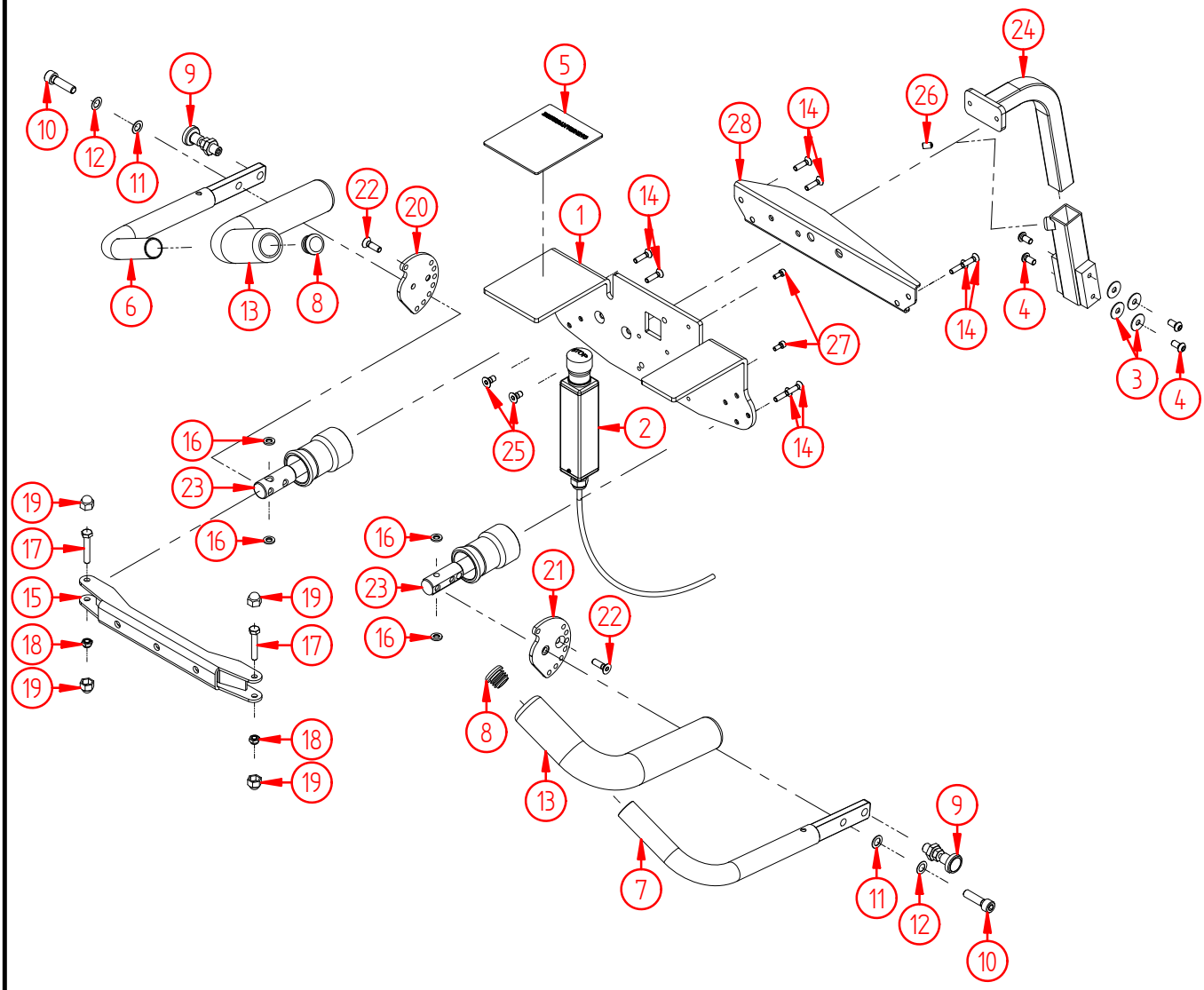

Product name:	**Attendant control, Emergency stop switch**
Product no:	**HP20071066**
Product reference:	**Balder F/L**
Manufacturer:	Etac AS, www.etac.com
Revision:	**29.05.09**

Pos no.	Part no.	Qty	Description
1	10190	1	Main bracket, att.control w/emerg.stop
2	10186	1	Emergency stop switch w/3,0m wire.
3	1338	4	Washer M6x20 DIN 522 Elzink
4	1312	4	Screw, hexagon socket pan head M6x12 ISO7380 Elzink 10,9
5	9434	1	Label for attendant control w/emergency stop
6	11799	1	Handlebar, LH, att.control w/emerg. stop (from march 2007)
7	11798	1	Handlebar, RH, att.control w/emerg. stop (from march 2007)
8	2054	2	Ribbed Plastic Insert
9	4506	2	Fixation bolt M10x1,0
10	4896	2	Screw, hexagon socket M8x30 DIN 912 Elzink 8,8
11	11803	2	Discspring ø8,4x15x0,8 DIN137b-A2
12	11802	2	Siscspring ø8,4x15x0,5 DIN137A-A2
13	10185	1	Sponge rubber,set of 2 pieces, att.control w/emerg.stop
14	4469	8	Screw, hexagon socket countersunk M5x20 DIN 7991 Elzink 8,8
15	10188	1	Crossbar, att.control w/emerg.stop
16	11804	4	Washer, nylon, ø6,4/12x1,6mm DIN125
17	000361	2	Screw, hexagon M6x35 DIN 933 Elzink 8,8
18	1157	2	Nut, nylock M6 DIN 985 Elzink 8,8
19	1192	4	Nut cover BK10 M6
20	11801	1	Adjustmentplate, LH, att.control w/emerg.stop (from march 07)
21	11800	1	Adjustmentplate, RH, att.control w/emerg.stop (from march 07)
22	9345	2	Screw, hexagon socket countersunk M6x20 DIN 7991 Elzink 8,8
23	10189	2	Springhousing, att.control w/emerg.stop
24	10191	1	Attachment bracket, compl., att.control w/emerg.stop
25	1308	2	Screw, hexagon socket countersunk M6x12 DIN 7991 Elzink 8,8
26	2340	1	Screw, hexagon set, M6x10 DIN 916 Unplated
27	4054	2	Screw, hexagon socket M4x10 DIN 912 Elzink 8,8
28	12822	1	Reinforcment bracket, attendant control

Part no.	Qty	Description
.	.	.
.	.	.
.	.	.
.	.	.

Product name:	**Attendant control, Balder 2**
Product no:	**HP20071067**
Product reference:	**Balder F/L**
Manufacturer:	Etac AS, www.etac.com
Revision:	**06.05.08**

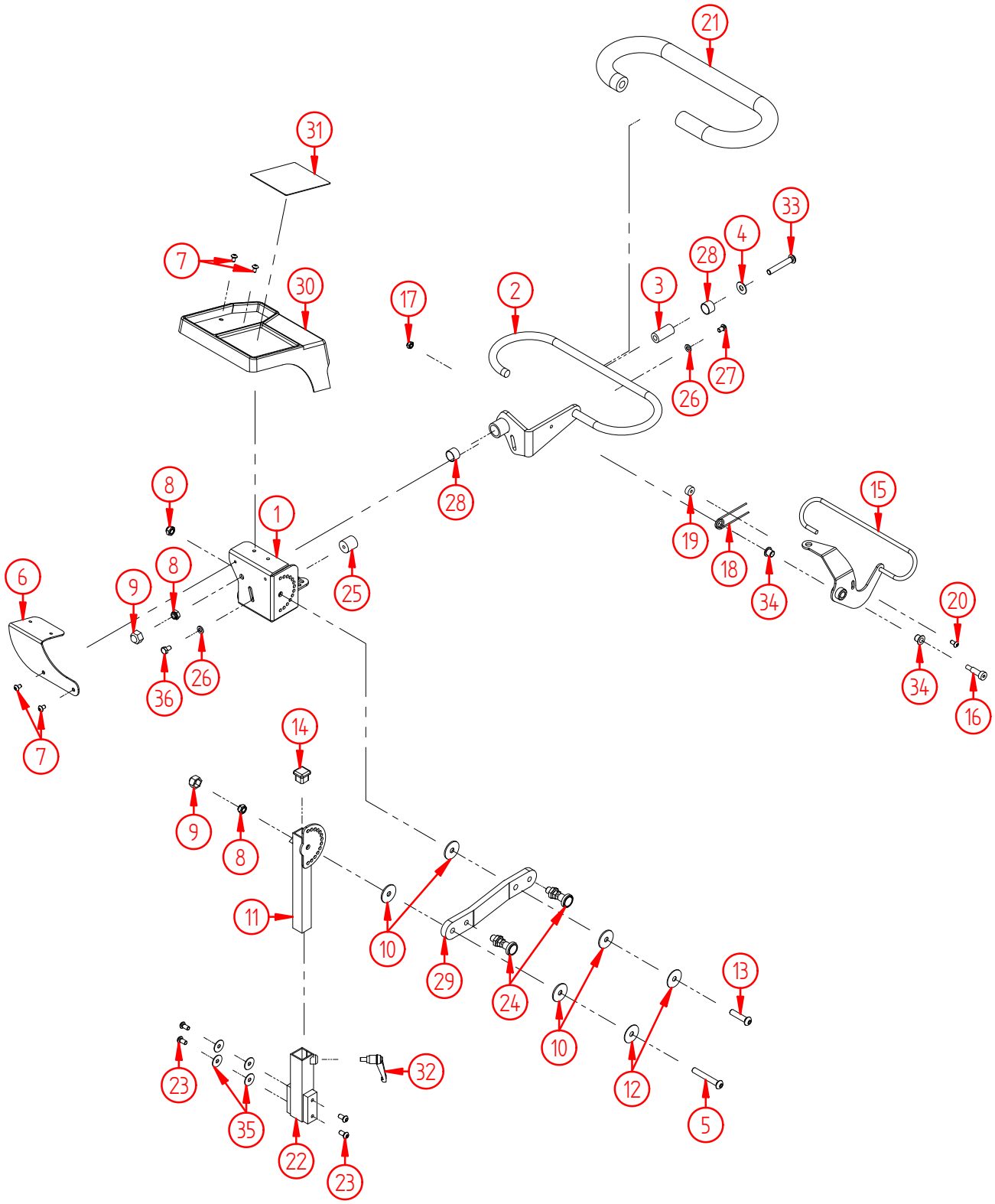

Product name:	**Attendant control, Balder 2**
Product no:	**HP20071067**
Product reference:	**Balder F/L**
Manufacturer:	Etac AS, www.etac.com
Revision:	**06.05.08**

Pos no.	Part no.	Qty	Description
1	4659	1	Main bracket for dual attendant 2
2	4666	1	Handle for dual attendant 2
3	4663	1	Sleeve for handle
4	1064	1	Washer M8x20 DIN 522 Elzink
5	9419	1	Screw, hexagon socket pan head M8x55 DIN 7380 Elzink 10,9
6	4664	1	Bracket for plastic cover dual attendant 2
7	4403	4	Screw, hexagon socket pan head M5x8 ISO7380 Elzink 10,9
8	1070	3	Nut, nylock M8 DIN 985 El.zink 8,8
9	3759	2	Nut cover BK13 M8
10	4661	4	Washer, black T30/2/8
11	4667	1	Main arm for dual attendant
12	000447	2	Washer M8x30 DIN 522 Elzink
13	4468	1	Screw, hexagon socket pan head M8x35 DIN 7380 Elzink 8,8
14	2045	1	Ribbed Plastic Insert20x20
15	4665	1	Clamp for dual attendant 2
16	4505	1	Fit bolt 6x8x20
17	1157	1	Nut, nylock M6 DIN 985 Elzink 8,8
18	4504	1	Spring 7147 for ledsagerstyring 2
19	4662	1	Spring nut
20	4402	1	Screw, hexagon socket pan head M5x10 ISO 7380 Elzink 10,9
21	1316	1	Sponge rubber
22	1289	1	Mounting bracket
23	1312	4	Screw, hexagon socket pan head M6x12 ISO7380 Elzink 10,9
24	4506	2	Fixation bolt M10x1,0
25	1303	1	Anti Vibration Mount 20x20xM6
26	1311	2	Washer M6 DIN 125 Elzink
27	3727	1	Screw, hexagon socket pan head M6x10 ISO7380 Elzink 10,9
28	4577	2	Plain bearing MB1612DU
29	4660	1	Arm for dual attendant 2
30	4519	1	Plastic cover for dual attendant 2
31	1300	1	Label, user instructions dual attendant F
32	000294	1	Locking handle, M6x16, APS
33	1217	1	Screw, hexagon socket pan head M8x50 DIN 7380 Elzink 8,8
34	9800	2	Plain Bearing, plastic GFM-0810-10
35	1338	4	Washer M6x20 DIN 522 Elzink
36	2766	1	Screw, hexagon M6x10 DIN 933 Elzink 8,8

Part no.	Qty	Description
.	.	.
.	.	.
.	.	.
.	.	.

Product name:	**Control unit, Separate panel w/seatfunctions (ARC5)**
Product no:	**HP20071068**
Product reference:	**Balder F/L/J**
Manufacturer:	Etac AS, www.etac.com
Revision:	**01.01.07**

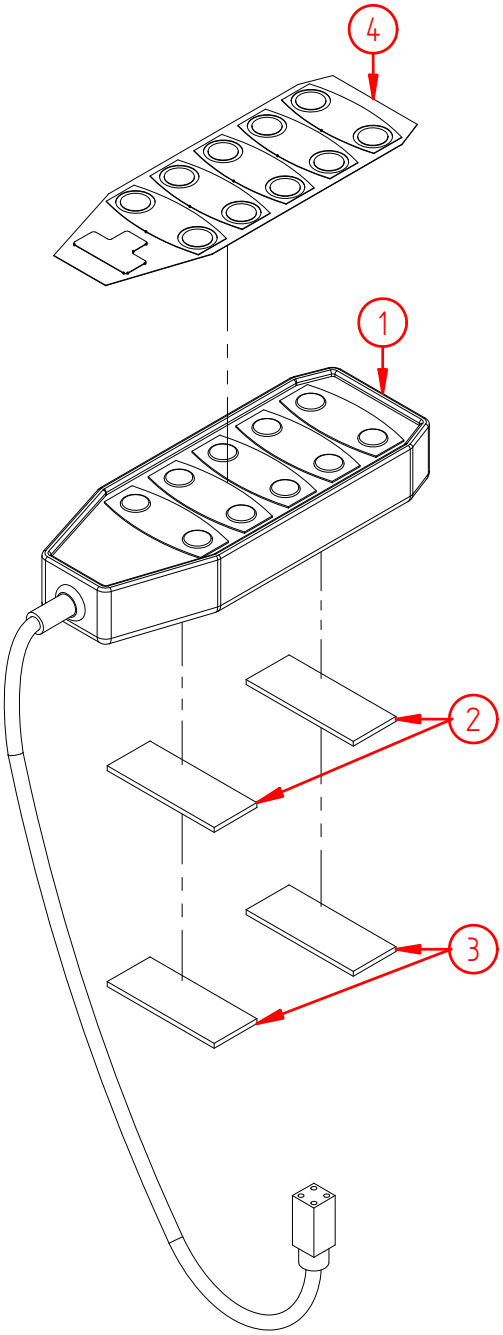

Product name:	**Control unit, Separate panel w/seatfunctions (ARC5)**
Product no:	**HP20071068**
Product reference:	**Balder F/L/J**
Manufacturer:	Etac AS, www.etac.com
Revision:	**01.01.07**

Pos no.	Part no.	Qty	Description
1	1296	1	Panel, separate DX-ARC5
2	1103	2	Velcroue, hook 20mm, with glue
3	4000	2	Velcroue, loop 20mm, with glue
4	1273	1	Label for DX Separate touch control panel Balder F

Part no.	Qty	Description
.	.	.
.	.	.
.	.	.
.	.	.

Product name:	**Control unit, Attendant control, ACU1**
Product no:	**HP20071069**
Product reference:	**Balder F/L/J**
Manufacturer:	Etac AS, www.etac.com
Revision:	**01.01.07**

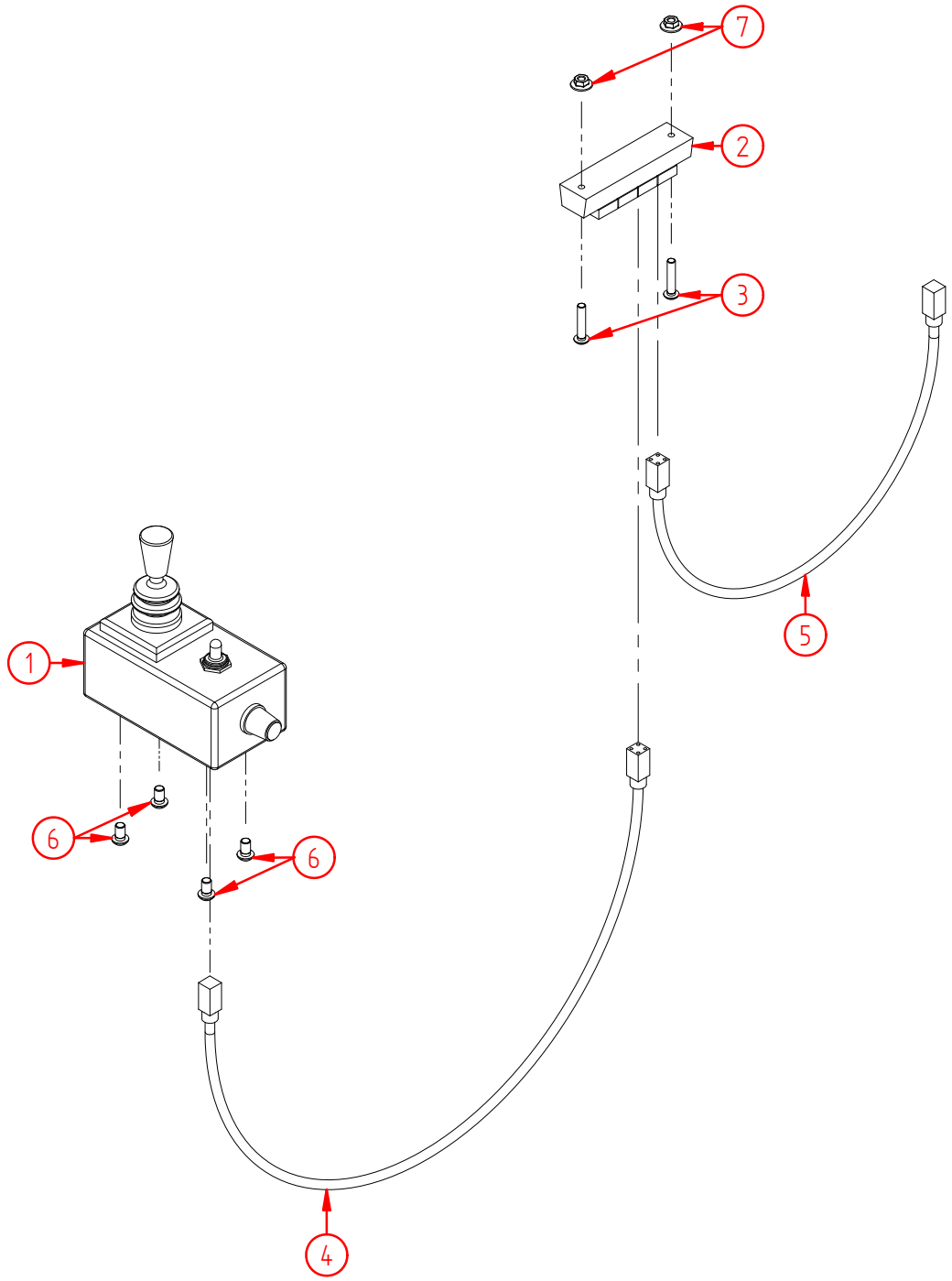

Product name:	**Control unit, Attendant control, ACU1**
Product no:	**HP20071069**
Product reference:	**Balder F/L/J**
Manufacturer:	Etac AS, www.etac.com
Revision:	**01.01.07**

Pos no.	Part no.	Qty	Description
1	1247	1	Joystick, Dual Control Remote DX-ACU1
2	1295	1	Switch box DX-SKT-X4
3	4226	2	Screw, hexagon socket pan head M5x25 DIN 7380 Elzink 10,9
4	1163	1	Cable, DX-BUS 1,2m
5	4490	1	Cable DX-BUS 0,3 M
6	3727	4	Screw, hexagon socket pan head M6x10 ISO7380 Elzink 10,9
7	1189	2	Nut, tensilock M5 DIN 6923 Goldfinish 8.8

Part no.	Qty	Description
.	.	.
.	.	.
.	.	.
.	.	.

Product name:	**Control unit, Attendant control, ACU3 w/ARC5**
Product no:	**HP20071070**
Product reference:	**Balder F/L/J**
Manufacturer:	Etac AS, www.etac.com
Revision:	**01.01.07**

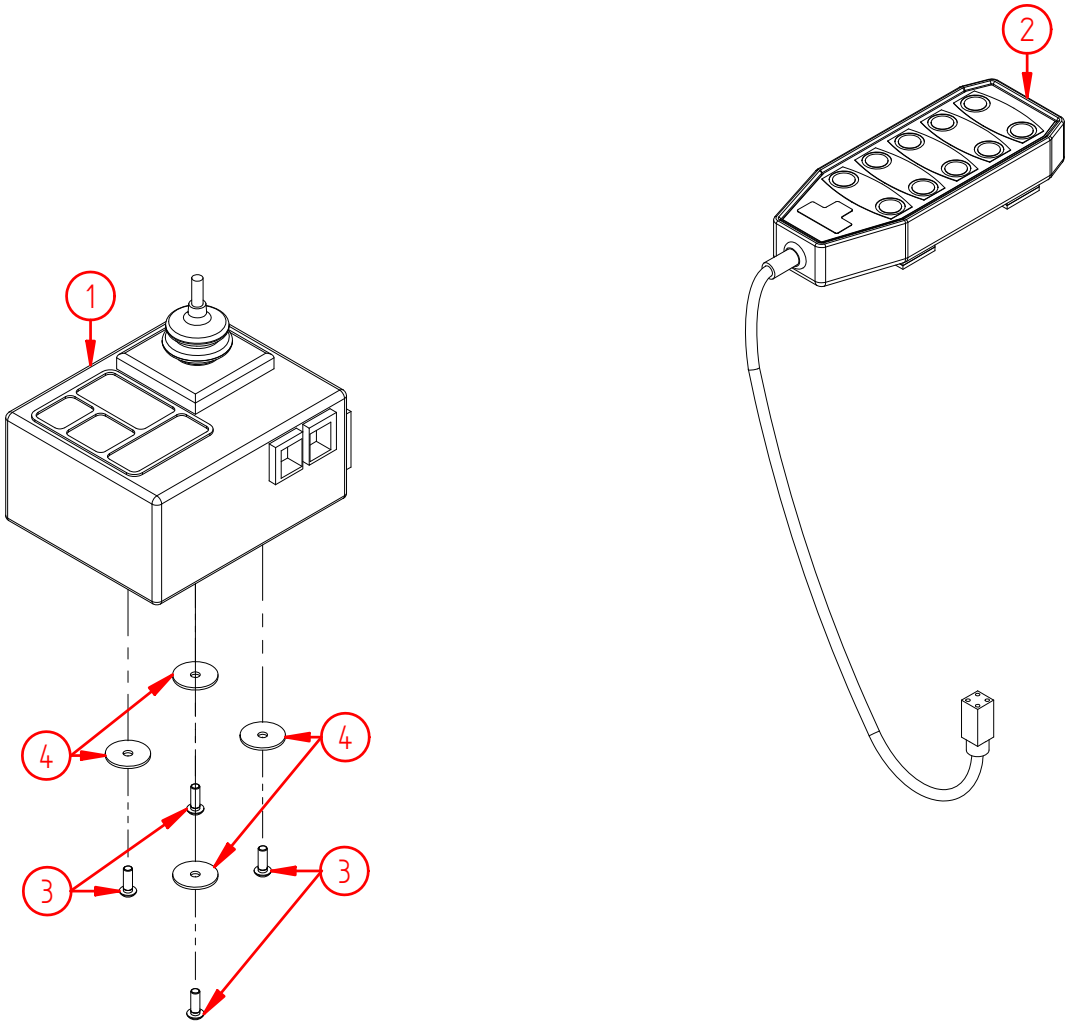

Product name:	**Control unit, Attendant control, ACU3 w/ARC5**
Product no:	**HP20071070**
Product reference:	**Balder F/L/J**
Manufacturer:	Etac AS, www.etac.com
Revision:	**01.01.07**

Pos no.	Part no.	Qty	Description
1	1244	1	Joystick, Master Attendant Control Balder F/L/J DX-ACU3
2	20071068	1	Control unit, Separate panel w/seatfunctions (ARC5)
3	4427	4	Screw, hexagon socket pan head M4x12 DIN 7380 Elzink 10,9
4	11443	4	Washer M4x20 DIN 522 Elzink

Part no.	Qty	Description
.	.	.
.	.	.
.	.	.
.	.	.

Product name:	**Joystick fastner, Standard DX-G80/DX-G90**
Product no:	**HP20071071**
Product reference:	**Balder F/L**
Manufacturer:	Etac AS, www.etac.com
Revision:	**01.01.07**

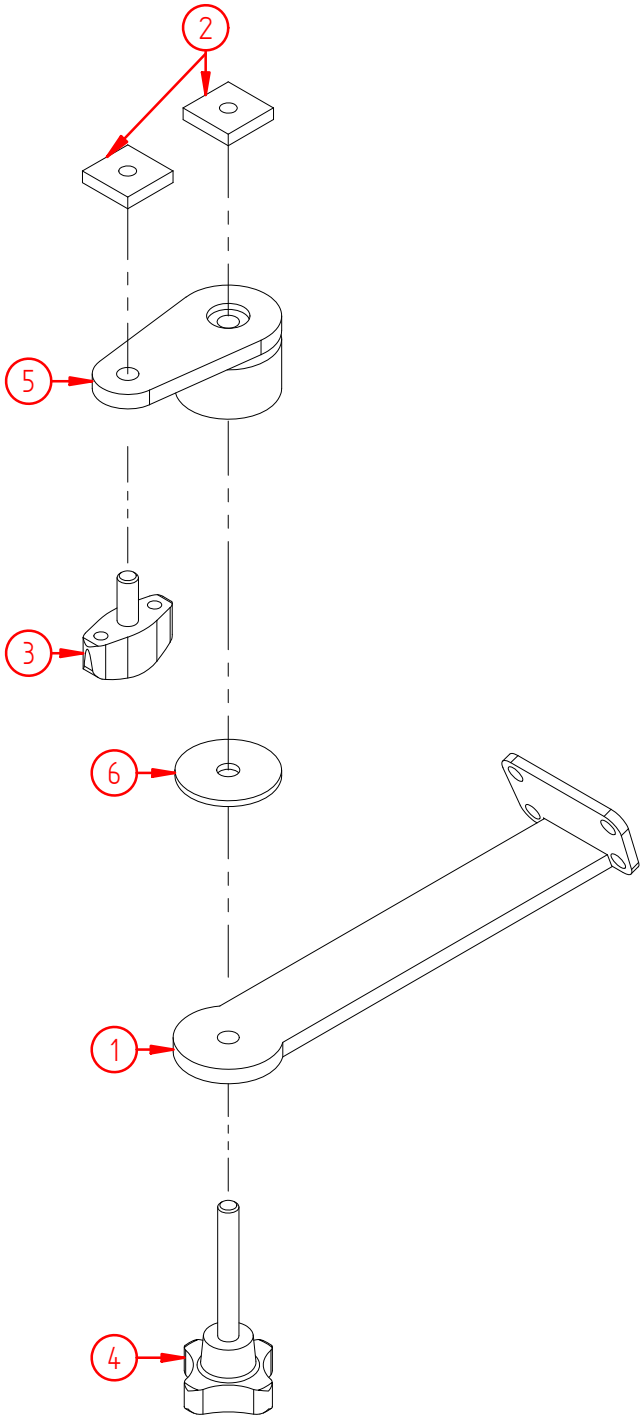

Product name:	**Joystick fastner, Standard DX-G80/DX-G90**
Product no:	**HP20071071**
Product reference:	**Balder F/L**
Manufacturer:	Etac AS, www.etac.com
Revision:	**01.01.07**

Pos no.	Part no.	Qty	Description
1	10131	1	Bracket, plate for joystick G80/G90
2	1276	2	Nut 18x18x4xM6, square, steel
3	000532	1	Locking lever M6x15
4	10128	1	Lever, M6x45, 4-arms
5	10129	1	Bracket, fixation, std-bracket joystick
6	10130	1	Washer, plastic, soft, ø30/ø6,5x2mm

Part no.	Qty	Description
.	.	.
.	.	.
.	.	.
.	.	.

Product name:	**Joystick fastner, Standard DX-REM34**
Product no:	**HP20071072**
Product reference:	**Balder F/L**
Manufacturer:	Etac AS, www.etac.com
Revision:	**01.01.07**

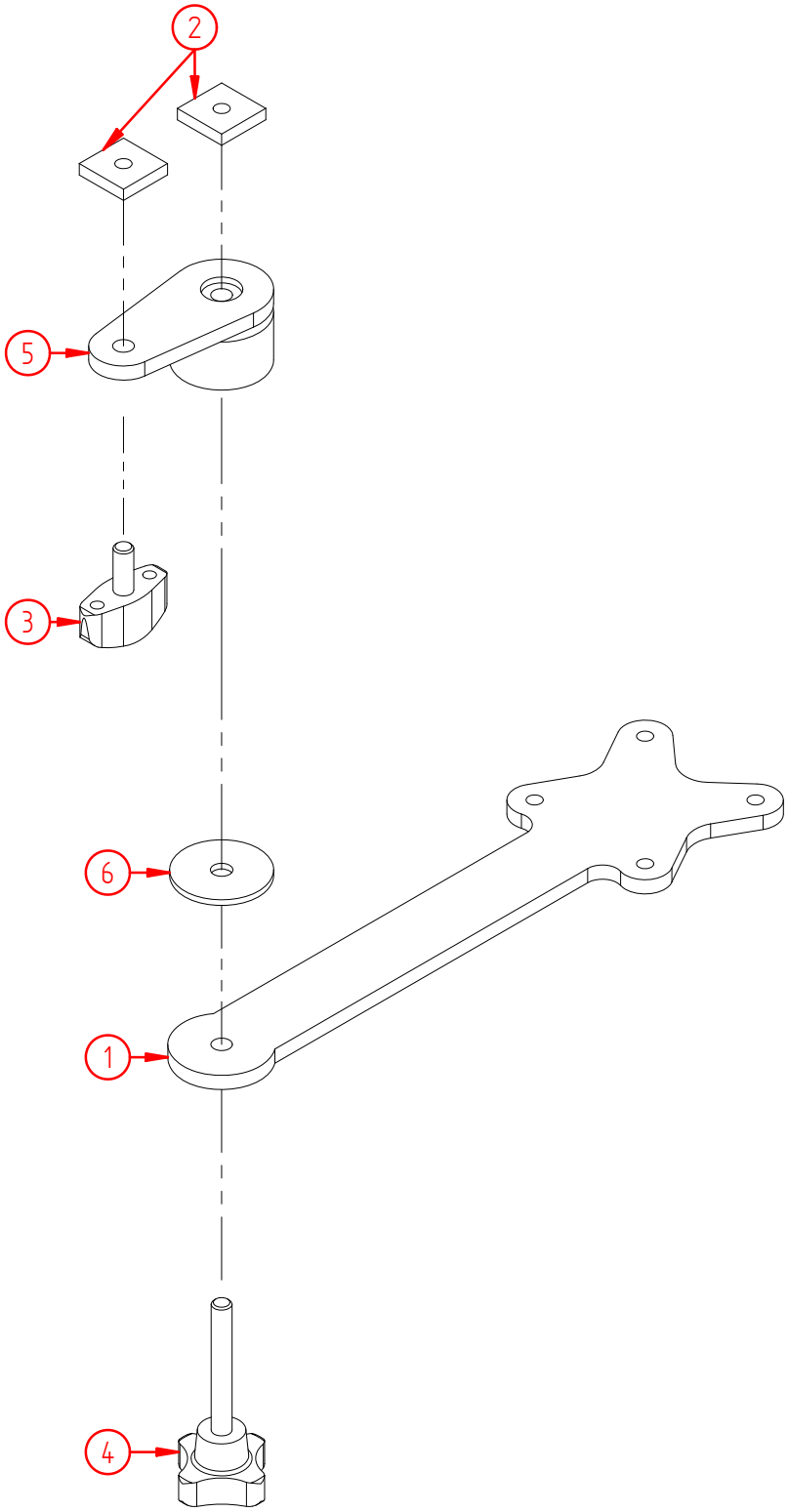

Product name:	**Joystick fastner, Standard DX-REM34**
Product no:	**HP20071072**
Product reference:	**Balder F/L**
Manufacturer:	Etac AS, www.etac.com
Revision:	**01.01.07**

Pos no.	Part no.	Qty	Description
1	10132	1	Bracket, plate for joystick REM34
2	1276	2	Nut 18x18x4xM6, square, steel
3	000532	1	Locking lever M6x15
4	10128	1	Lever, M6x45, 4-arms
5	10129	1	Bracket, fixation, std-bracket joystick
6	10130	1	Washer, plastic, soft, ø30/ø6,5x2mm

Part no.	Qty	Description
.	.	.
.	.	.
.	.	.
.	.	.

Product name:	**Joystick fastner, Swing-awayDX-G80/DX-G90**
Product no:	**HP20071073**
Product reference:	**Balder F/L**
Manufacturer:	Etac AS, www.etac.com
Revision:	**24.02.11**

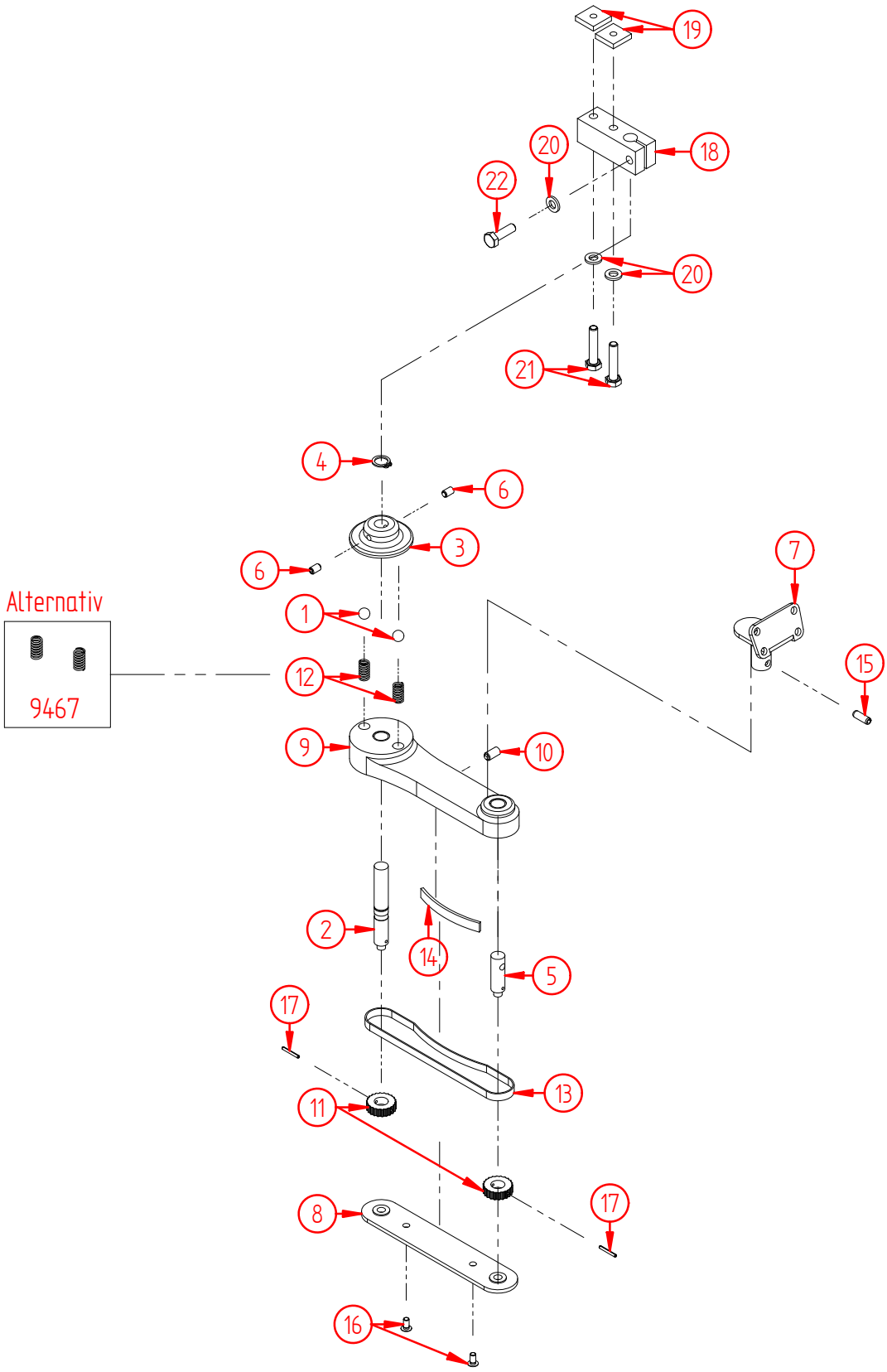

Product name:	**Joystick fastner, Swing-awayDX-G80/DX-G90**
Product no:	**HP20071073**
Product reference:	**Balder F/L**
Manufacturer:	Etac AS, www.etac.com
Revision:	**24.02.11**

Pos no.	Part no.	Qty	Description
1	9456	2	Ball 8mm, tempered
2	9457	1	Axel, rear, swing away 2
3	9458	1	Locking disc, swing away2
4	1153	1	Circlip Ø10, outside DIN 471 Unplated
5	9459	1	Axel, front, swing away 2
6	1209	2	Screw, set M5x8 DIN 916 UBL
7	9469	1	Bracket for Europa joystick, swing away 2
8	9461	1	Cover, paralellarm, swing away 2
9	9468	1	Paralellarm, swing away 2
10	1088	1	Screw, hexagon set, M6x12 DIN 916 Unplated
11	9464	2	Tooth beltwheel, swing away 2
12	9606	2	Spring, reinforced for swing away 2
13	9465	1	Tooth belt, swing away 2
14	9466	1	Tension plate, swing away 2
15	9473	1	Splint pipe 5x14 DIN 1481 Unplated
16	9472	2	Screw, hexagon socket pan head M4x8 DIN 7380 Elzink 8,8
17	9471	2	Splint pipe 2x16 DIN 1481 Unplated
18	1167	1	Bracket, for joystickfixations
19	1276	2	Nut 18x18x4xM6, square, steel
20	1311	3	Washer M6 DIN 125 Elzink
21	1201	2	Screw, hexagon M6x30 DIN 933 Elzink 8,8
22	1156	1	Screw, hexagon M6x20 DIN 933 Elzink 8,8

Part no.	Qty	Description
.	.	Alternatives:
9467	2	Spring, std, for swing away 2
10614	1	Axel, 50mm extension, swing away 2
10615	1	Axel, 30mm extension, swing away 2

Product name:	**Joystick fastner, Swing-away DX-REM34**
Product no:	**HP20071074**
Product reference:	**Balder F/L**
Manufacturer:	Etac AS, www.etac.com
Revision:	**24.02.11**

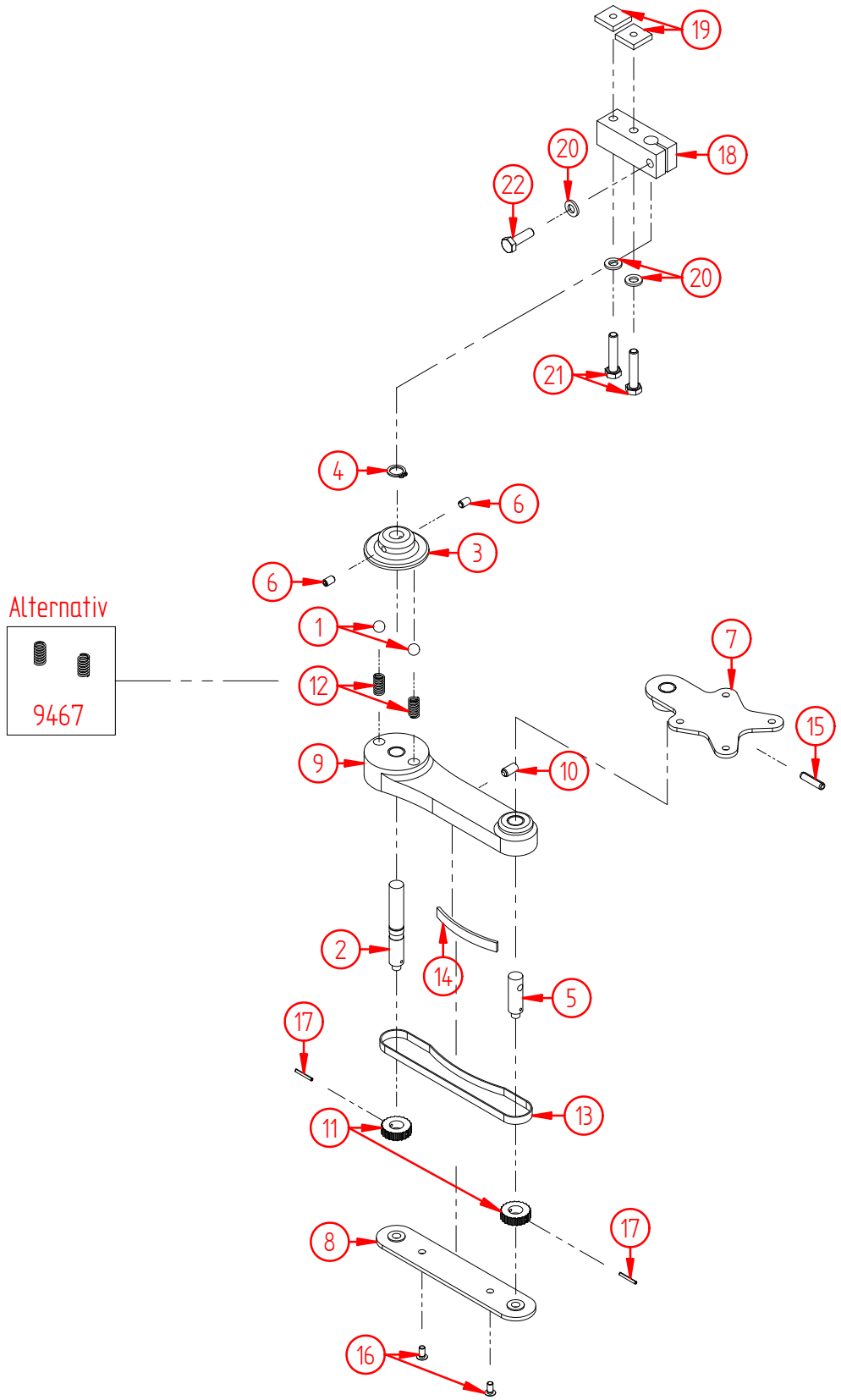

Product name:	**Joystick fastner, Swing-away DX-REM34**
Product no:	**HP20071074**
Product reference:	**Balder F/L**
Manufacturer:	Etac AS, www.etac.com
Revision:	**24.02.11**

Pos no.	Part no.	Qty	Description
1	9456	2	Ball 8mm, tempered
2	9457	1	Axel, rear, swing away 2
3	9458	1	Locking disc, swing away2
4	1153	1	Circlip Ø10, outside DIN 471 Unplated
5	9459	1	Axel, front, swing away 2
6	1209	2	Screw, set M5x8 DIN 916 UBL
7	9460	1	Bracket for Dolphin joystick, swing away 2
8	9461	1	Cover, paralellarm, swing away 2
9	9468	1	Paralellarm, swing away 2
10	1088	1	Screw, hexagon set, M6x12 DIN 916 Unplated
11	9464	2	Tooth beltwheel, swing away 2
12	9606	2	Spring, reinforced for swing away 2
13	9465	1	Tooth belt, swing away 2
14	9466	1	Tension plate, swing away 2
15	9470	1	Splint pipe M5x20 DIN 1481
16	9472	2	Screw, hexagon socket pan head M4x8 DIN 7380 Elzink 8,8
17	9471	2	Splint pipe 2x16 DIN 1481 Unplated
18	1167	1	Bracket, for joystickfixations
19	1276	2	Nut 18x18x4xM6, square, steel
20	1311	3	Washer M6 DIN 125 Elzink
21	1201	2	Screw, hexagon M6x30 DIN 933 Elzink 8,8
22	1156	1	Screw, hexagon M6x20 DIN 933 Elzink 8,8

Part no.	Qty	Description
.	.	Alternatives:
9467	2	Spring, std, for swing away 2
10614	1	Axel, 50mm extension, swing away 2
10615	1	Axel, 30mm extension, swing away 2

04. Wheels

Product name:	**Wheel (F/B/J/L)**
Product no:	**.**
Product reference:	**Balder F/B/J/L**
Manufacturer:	Etac AS, www.etac.com
Revision:	**01.01.07**

Wheel 3.00-8 (F/J)

Wheel 2.50-3 (F/B/J)

Wheel 3,50-8 (L)

Wheel 2,80-2,50-4 (L)

Product name:	**Wheel (F/B/J/L)**
Product no:	.
Product reference:	**Balder F/B/J/L**
Manufacturer:	Etac AS, www.etac.com
Revision:	**01.01.07**

Wheel 3.00-8 (F/J)

11577 - Wheel 3.00-8 Racing w/air complete (F/J)

11578 - Wheel 3.00-8 Big Pattern w/air complete (F/J)

11579 - Wheel 3.00-8 Big Pattern w/ flex (F/J)

11580 - Wheel 3.00-8 Longitudinal Groove w/air compl. F/J

11581 - Wheel 3.00-8 Longitudinal Groove w/flexcompl. F/J

11582 - Wheel 3.00-8 Studded w/air complete (F/J)

11583 - Wheel 3.00-8 Studded w/ flex (F/J)

4626 - Wheel 3.00-8 flex complete (F/J

4627 - Wheel 3.00-8 w/air complete (F/J)

Wheel 2.50-3 (F/B/J)

000087 - Wheel 2,50-3 flex complete (F/B/J)

000631 - Wheel 2.50-3 w/air, complete (F/B/J)

Wheel 3,50-8 (L)

4602 - Wheel 3,50-8 w/flex complete (L)

4603 - Wheel 3,50-8 w/air complete (L)

Wheel 2,80-2,50-4 (L)

4600 - Wheel 2,80-2,50-4 w/air complete (L)

4601 - Wheel 2,80-2,50-4 w/flex complete (L)

Part no.	Qty	Description
.	.	.
.	.	.
.	.	.
.	.	.

05. Seating unit

Product name:	**Seat, pad, ..., Comfort 1 - 6**
Product no:	**HP20071158 - HP20071181**
Product reference:	**Balder F/L**
Manufacturer:	Etac AS, www.etac.com
Revision:	**01.01.07**

HP20071158 - HP20071163

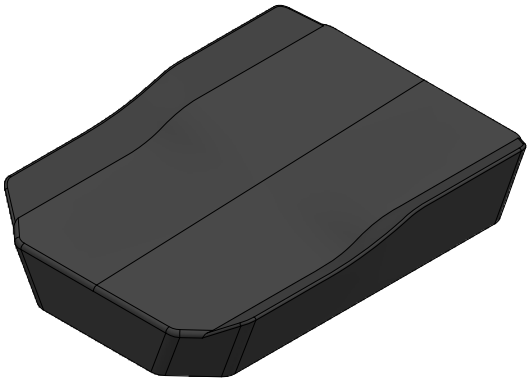

HP20071164 - HP20071169

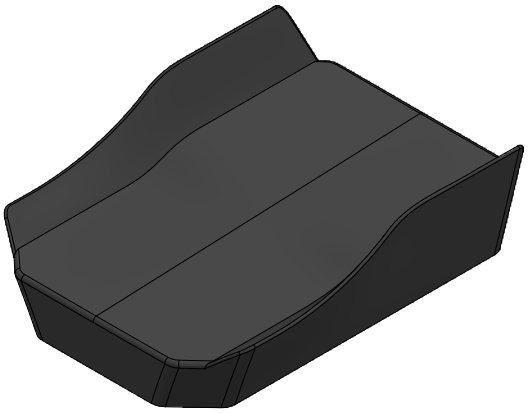

HP20071170 - HP20071175

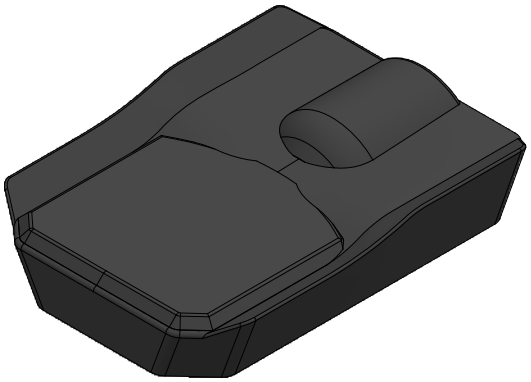

HP20071176 - HP20071181

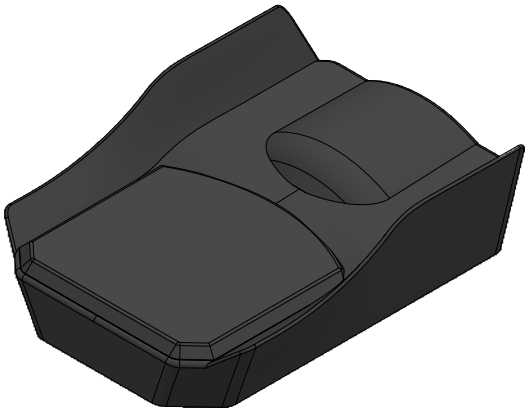

Product name:	**Seat, pad, ..., Comfort 1 - 6**
Product no:	**HP20071158 - HP20071181**
Product reference:	**Balder F/L**
Manufacturer:	Etac AS, www.etac.com
Revision:	**01.01.07**

HP20071158 - Seat, pad, std, comfort 1
HP20071159 - Seat, pad, std, comfort 2
HP20071160 - Seat, pad, std, comfort 3
HP20071161 - Seat, pad, std, comfort 4
HP20071162 - Seat, pad, std, comfort 5
HP20071163 - Seat, pad, std, comfort 6

HP20071164 - Seat, pad, w/big side members, comfort 1
HP20071165 - Seat, pad, w/big side members, comfort 2
HP20071166 - Seat, pad, w/big side members, comfort 3
HP20071167 - Seat, pad, w/big side members, comfort 4
HP20071168 - Seat, pad, w/big side members, comfort 5
HP20071169 - Seat, pad, w/big side members, comfort 6

HP20071170 - Seat, pad, pressure relief, comfort 1
HP20071171 - Seat, pad, pressure relief, comfort 2
HP20071172 - Seat, pad, pressure relief, comfort 3
HP20071173 - Seat, pad, pressure relief, comfort 4
HP20071174 - Seat, pad, pressure relief, comfort 5
HP20071175 - Seat, pad, pressure relief, comfort 6

HP20071176 - Seat, pad, pres. relief w/big side members, comf 1
HP20071177 - Seat, pad, pres. relief w/big side members, comf 2
HP20071178 - Seat, pad, pres. relief w/big side members, comf 3
HP20071179 - Seat, pad, pres. relief w/big side members, comf 4
HP20071180 - Seat, pad, pres. relief w/big side members, comf 5
HP20071181 - Seat, pad, pres. relief w/big side members, comf 6

Part no.	Qty	Description
.	.	.
.	.	.
.	.	.
.	.	.

Product name:	**Incontinence cover, ..., Comfort 1 - 6**
Product no:	**HP20071182 - HP20071193**
Product reference:	**Balder F/L**
Manufacturer:	Etac AS, www.etac.com
Revision:	**01.01.07**

HP20071182 - HP20071187

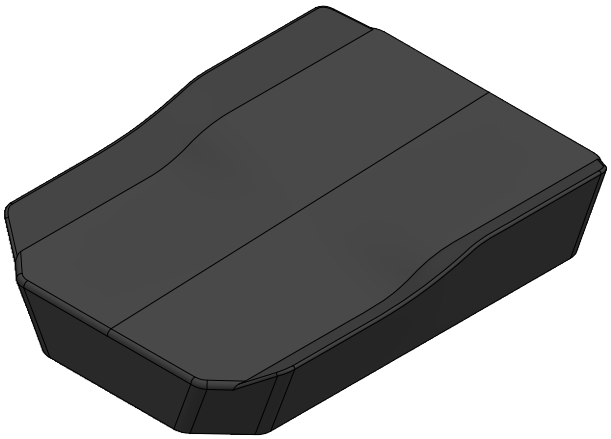

HP20071188 - HP20071193

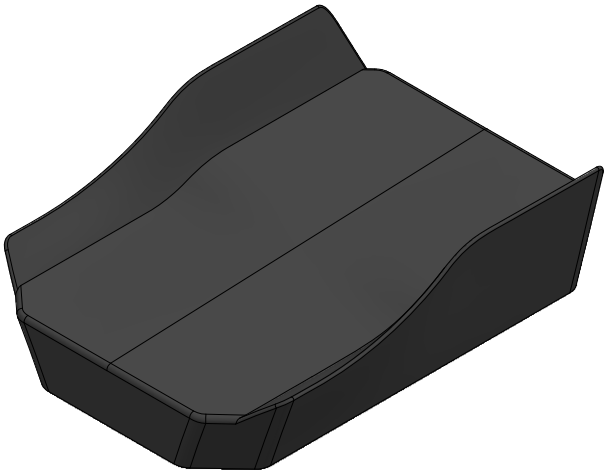

Product name:	**Incontinence cover, ..., Comfort 1 - 6**
Product no:	**HP20071182 - HP20071193**
Product reference:	**Balder F/L**
Manufacturer:	Etac AS, www.etac.com
Revision:	**01.01.07**

HP20071182 - Incontinence cover, Comfort 1

HP20071183 - Incontinence cover, Comfort 2

HP20071184 - Incontinence cover, Comfort 3

HP20071185 - Incontinence cover, Comfort 4

HP20071186 - Incontinence cover, Comfort 5

HP20071187 - Incontinence cover, Comfort 6

HP20071188 - Incontinence cover,big side members, Comfort 1

HP20071189 - Incontinence cover,big side members, Comfort 2

HP20071190 - Incontinence cover,big side members, Comfort 3

HP20071191 - Incontinence cover,big side members, Comfort 4

HP20071192 - Incontinence cover,big side members, Comfort 5

HP20071193 - Incontinence cover,big side members, Comfort 6

Part no.	Qty	Description
.	.	.
.	.	.
.	.	.
.	.	.

Product name:	**Back, pad, ..., Comfort 1 - 6**
Product no:	**HP20071201 - HP20071224**
Product reference:	**Balder F/L**
Manufacturer:	Etac AS, www.etac.com
Revision:	**01.01.07**

HP20071201 - HP20071206

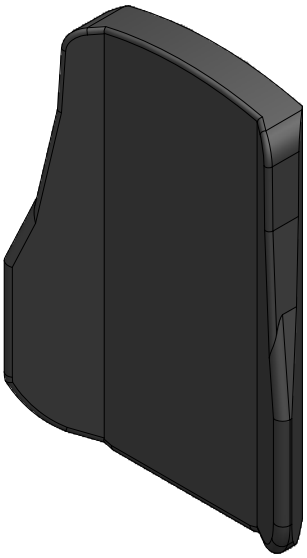

HP20071207 - HP20071212

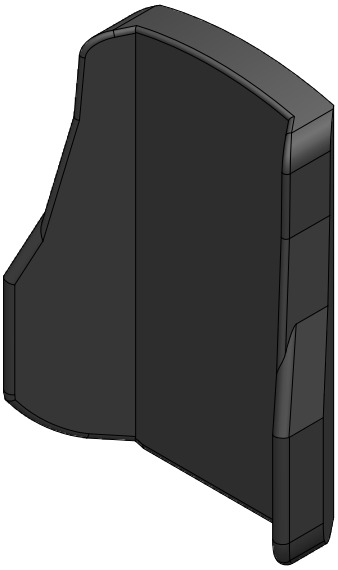

HP20071213 - HP20071218

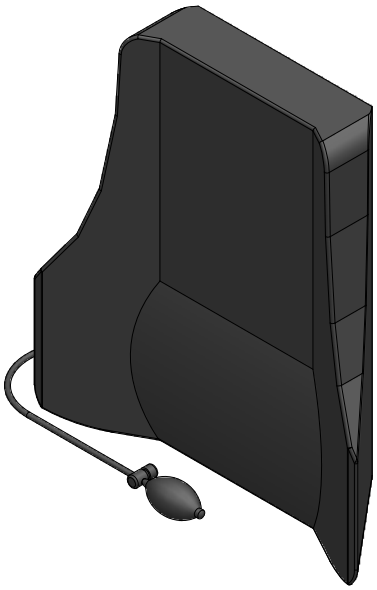

HP20071219 - HP20071224

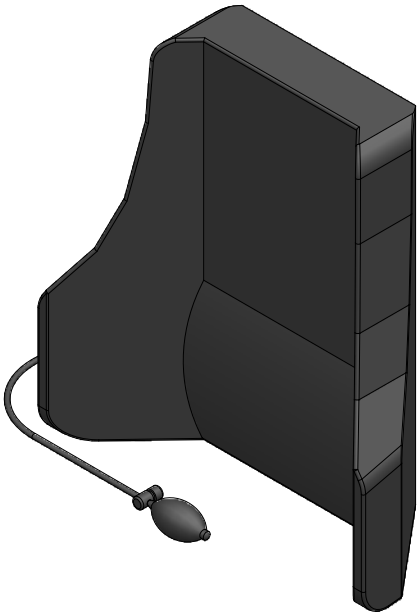

Product name:	**Back, pad, ..., Comfort 1 - 6**
Product no:	**HP20071201 - HP20071224**
Product reference:	**Balder F/L**
Manufacturer:	Etac AS, www.etac.com
Revision:	**01.01.07**

HP20071201 - Back, pad, std, comfort 1
HP20071202 - Back, pad, std, comfort 2
HP20071203 - Back, pad, std, comfort 3
HP20071204 - Back, pad, std, comfort 4
HP20071205 - Back, pad, std, comfort 5
HP20071206 - Back, pad, std, comfort 6

HP20071207 - Back, pad, w/big side members, comfort 1
HP20071208 - Back, pad, w/big side members, comfort 2
HP20071209 - Back, pad, w/big side members, comfort 3
HP20071210 - Back, pad, w/big side members, comfort 4
HP20071211 - Back, pad, w/big side members, comfort 5
HP20071212 - Back, pad, w/big side members, comfort 6

HP20071213 - Back, pad, w/air lumbar support, comfort 1
HP20071214 - Back, pad, w/air lumbar support, comfort 2
HP20071215 - Back, pad, w/air lumbar support, comfort 3
HP20071216 - Back, pad, w/air lumbar support, comfort 4
HP20071217 - Back, pad, w/air lumbar support, comfort 5
HP20071218 - Back, pad, w/air lumbar support, comfort 6

HP20071219 - Back, pad, w/air lumbar, big side members, comf 1
HP20071220 - Back, pad, w/air lumbar, big side members, comf 2
HP20071221 - Back, pad, w/air lumbar, big side members, comf 3
HP20071222 - Back, pad, w/air lumbar, big side members, comf 4
HP20071223 - Back, pad, w/air lumbar, big side members, comf 5
HP20071224 - Back, pad, w/air lumbar, big side members, comf 6

Part no.	Qty	Description
.	.	.
.	.	.
.	.	.
.	.	.

Product name:	**Back, Seat, pad, red - blue - green, ..., Junior**
Product no:	**HP20071229 - HP20071246**
Product reference:	**Balder J**
Manufacturer:	Etac AS, www.etac.com
Revision:	**01.01.07**

HP20071229 - HP20071231, HP20071235 - HP20071240

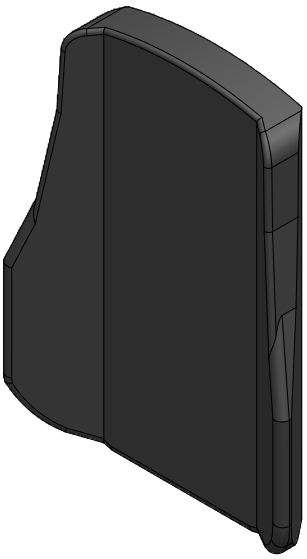

HP20071232 - HP20071234

HP20071241 - HP20071246

Product name:	**Back, Seat, pad, red - blue - green, ..., Junior**
Product no:	**HP20071229 - HP20071246**
Product reference:	**Balder J**
Manufacturer:	Etac AS, www.etac.com
Revision:	**01.01.07**

HP20071229 - Back, pad, red, J240
HP20071230 - Back, pad, blue, J240
HP20071231 - Back, pad, green, J240

HP20071235 - Back, pad, red, W:30 H:40, Junior
HP20071236 - Back, pad, blue, W:30 H:40, Junior
HP20071237 - Back, pad, green, W:30 H:40, Junior

HP20071238 - Back, pad, red, W:35 H:42, Junior
HP20071239 - Back, pad, blue, W:35 H:42, Junior
HP20071240 - Back, pad, green, W:35 H:42, Junior

HP20071232 - Seat, pad, red, J240
HP20071233 - Seat, pad, blue, J240
HP20071234 - Seat, pad, green, J240

HP20071241 - Seat, pad, red, W:30 D:35 Junior
HP20071242 - Seat, pad, blue, W:30 D:35 Junior
HP20071243 - Seat, pad, green, W:30 D:35 Junior

HP20071244 - Seat, pad, red, W:35 D:40 Junior
HP20071245 - Seat, pad, blue, W:35 D:40 Junior
HP20071246 - Seat, pad, green, W:35 D:40 Junior

Part no.	Qty	Description
.	.	.
.	.	.
.	.	.
.	.	.

Product name:	**Incontinence cover, ..., Junior**
Product no:	**HP20071247 - HP20071255**
Product reference:	**Balder J**
Manufacturer:	Etac AS, www.etac.com
Revision:	**01.01.07**

HP20071247 - HP20071252

HP20071253 - HP20071255

Product name:	**Incontinence cover, ..., Junior**
Product no:	**HP20071247 - HP20071255**
Product reference:	**Balder J**
Manufacturer:	Etac AS, www.etac.com
Revision:	**01.01.07**

HP20071247 - Incontinence cover, red, W:30 D:35 Junior

HP20071248 - Incontinence cover, blue, W:30 D:35 Junior

HP20071249 - Incontinence cover, green, W:30 D:35 Junior

HP20071250 - Incontinence cover, red, W:35 D:40 Junior

HP20071251 - Incontinence cover, blue, W:35 D:40 Junior

HP20071252 - Incontinence cover, green, W:35 D:40 Junior

HP20071253 - Incontinence cover, red, J240

HP20071254 - Incontinence cover, blue, J240

HP20071255 - Incontinence cover, green, J240

Part no.	Qty	Description
.	.	.
.	.	.
.	.	.
.	.	.

Product name:	**Bar for the tilt switch, Junior 230/235**
Product no:	**10100**
Product reference:	Balder J
Manufacturer:	HAND-PRO AS
Revision:	01.01.07

BALDER

Junior 230

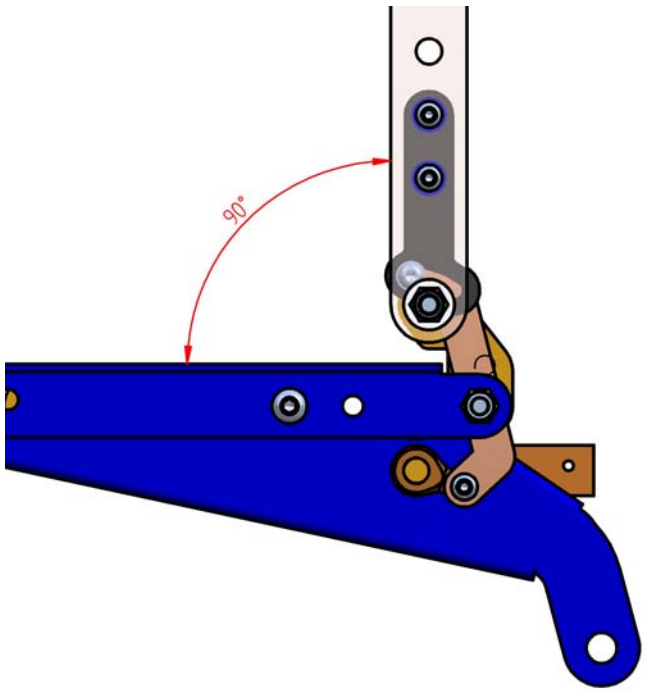

Junior 235

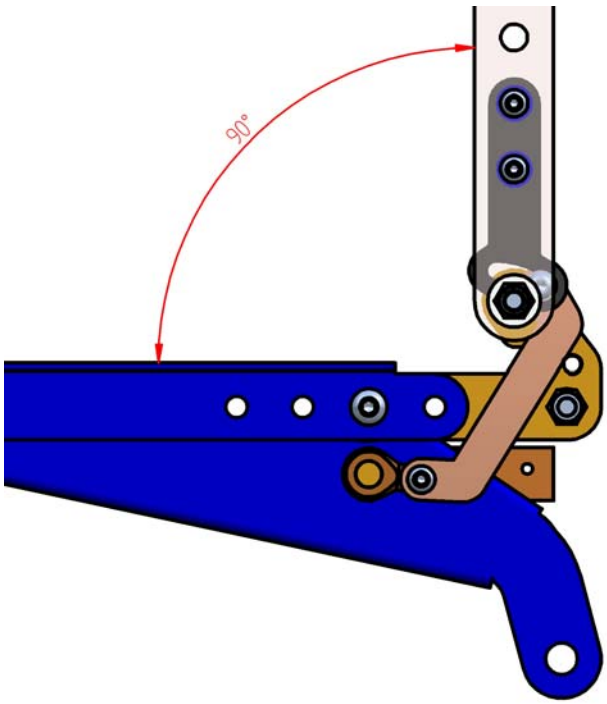

Product name:	**Bar for the tilt switch, Junior 230/235**
Product no:	**10100**
Product reference:	**Balder J**
Manufacturer:	**HAND-PRO AS**
Revision:	**01.01.07**

Junior	**230**	**235**
Eff. seat depth	**325**	**375**

Part no.	Qty	Description
.	.	.
.	.	.
.	.	.
.	.	.

Product name:	**Bar for tilt switch, lengthened, F/L**
Product no:	**4015**
Product reference:	Balder F/L
Manufacturer:	HAND-PRO AS
Revision:	01.01.07

BALDER

Bar for tilt switch
Balder with stand up function

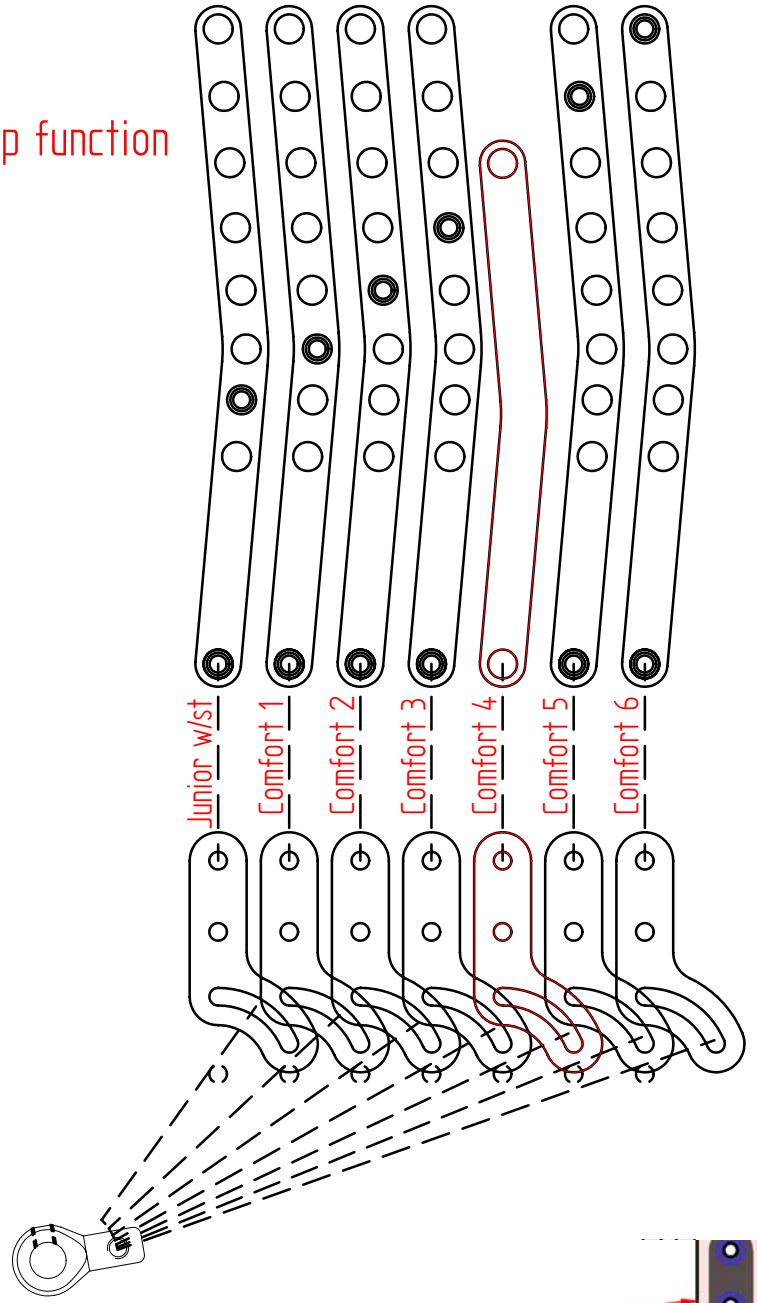

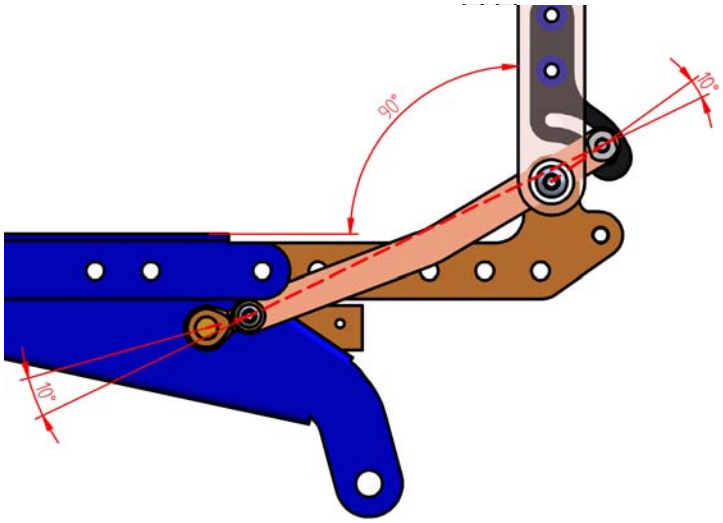

Product name:	**Bar for tilt switch, lengthened, F/L**
Product no:	**4015**
Product reference:	**Balder F/L**
Manufacturer:	**HAND-PRO AS**
Revision:	**01.01.07**

BALDER

Art.nr.
1224 Comfort 4
4015 Comfort 1, 2, 3, 4, 5, 6, Junior w/stand up function

Model	Junior w/st	Comfort 1	Comfort 3	Comfort 3	Comfort 4	Comfort 5	Comfort 6
Eff. seat depth	375	400	425	450	475	500	525

Part no.	Qty	Description
.	.	.
.	.	.
.	.	.
.	.	.

Product name:	**Abduction pad, Removable, height adjustable, F/L**
Product no:	**HP20071126**
Product reference:	**Balder F/L**
Manufacturer:	Etac AS, www.etac.com
Revision:	**18.08.08**

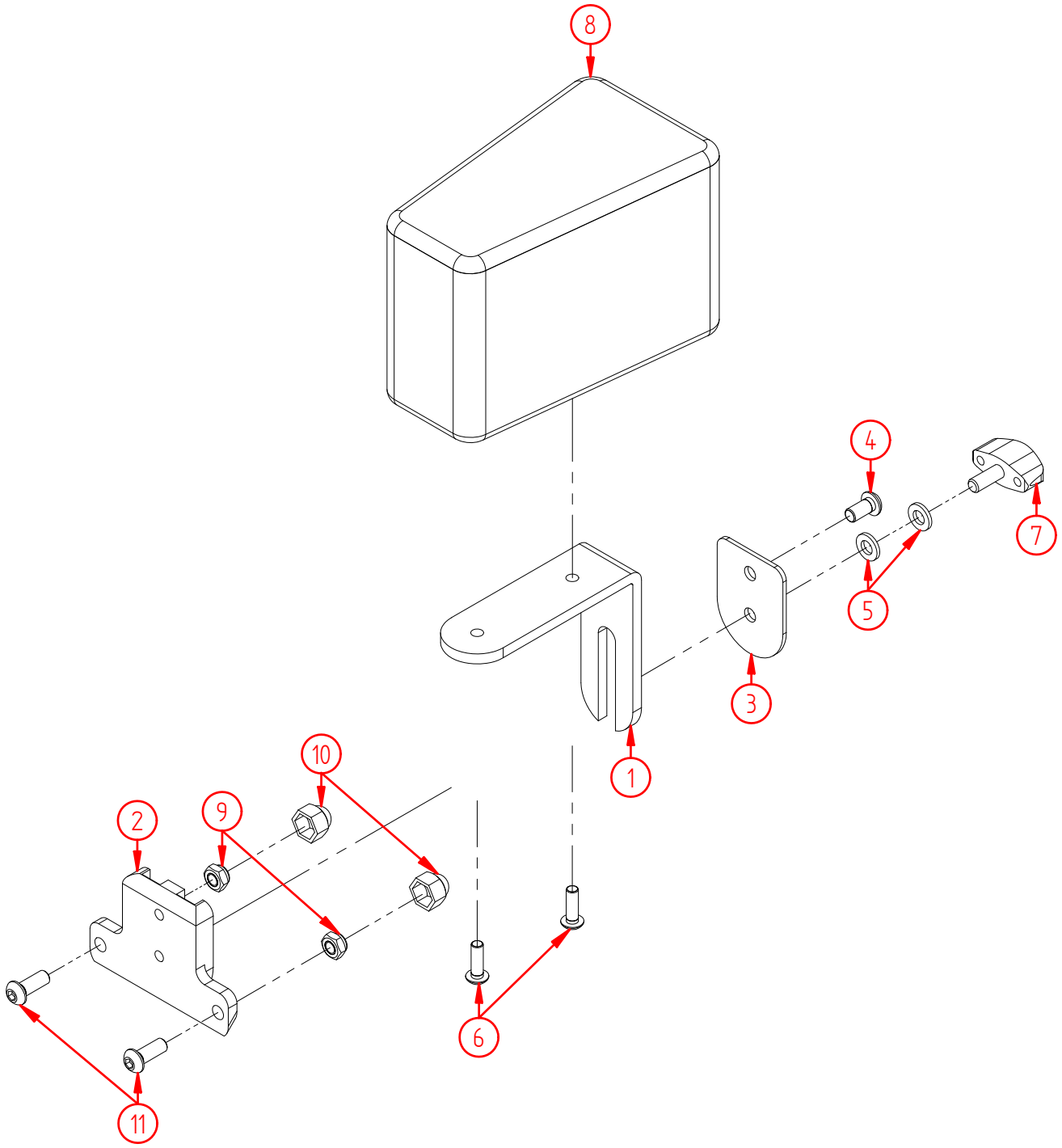

Product name:	**Abduction pad, Removable, height adjustable, F/L**
Product no:	**HP20071126**
Product reference:	**Balder F/L**
Manufacturer:	Etac AS, www.etac.com
Revision:	**18.08.08**

Pos no.	Part no.	Qty	Description
1	11840	1	Bracket, angle, abduction pad, height adjustable
2	11841	1	Bracket, fixation, abduction pad, height adjustable
3	11842	1	Locking plate, abduction pad, height adjustable
4	1312	1	Screw, hexagon socket pan head M6x12 ISO7380 Elzink 10,9
5	1311	2	Washer M6 DIN 125 Elzink
6	4401	2	Screw, hexagon socket pan head M5x16 ISO7380 Elzink 10,9
7	000532	1	Locking lever M6x15
8	11843	1	Cushion, abduction pad, height adjustable
9	1157	2	Nut, nylock M6 DIN 985 Elzink 8,8
10	1192	2	Nut cover BK10 M6
11	1107	2	Screw, hexagon socket pan head M6x16 ISO7380 Elzink 10,9

Part no.	Qty	Description
.	.	.
.	.	.
.	.	.
.	.	.

Product name:	**Abduction pad, Removable, w/velcro, F/L**
Product no:	**HP20071127**
Product reference:	**Balder F/L**
Manufacturer:	Etac AS, www.etac.com
Revision:	**01.01.07**

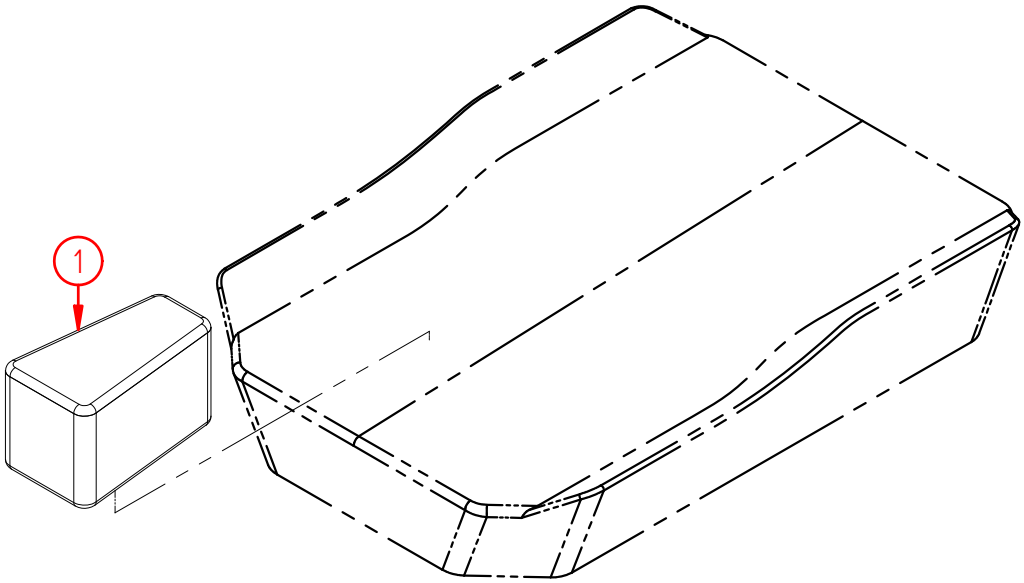

Product name:	**Abduction pad, Removable, w/velcro, F/L**
Product no:	**HP20071127**
Product reference:	**Balder F/L**
Manufacturer:	Etac AS, www.etac.com
Revision:	**01.01.07**

Pos no.	Part no.	Qty	Description
1	HP20071127	1	Abduction pad, Removable, w/velcro, F/L

Part no.	Qty	Description
.	.	.
.	.	.
.	.	.
.	.	.

Product name:	**Seat, chassis, comfort 1 - 6**
Product no:	**HP20071152 - HP20071157**
Product reference:	**Balder F/L**
Manufacturer:	Etac AS, www.etac.com
Revision:	**01.01.07**

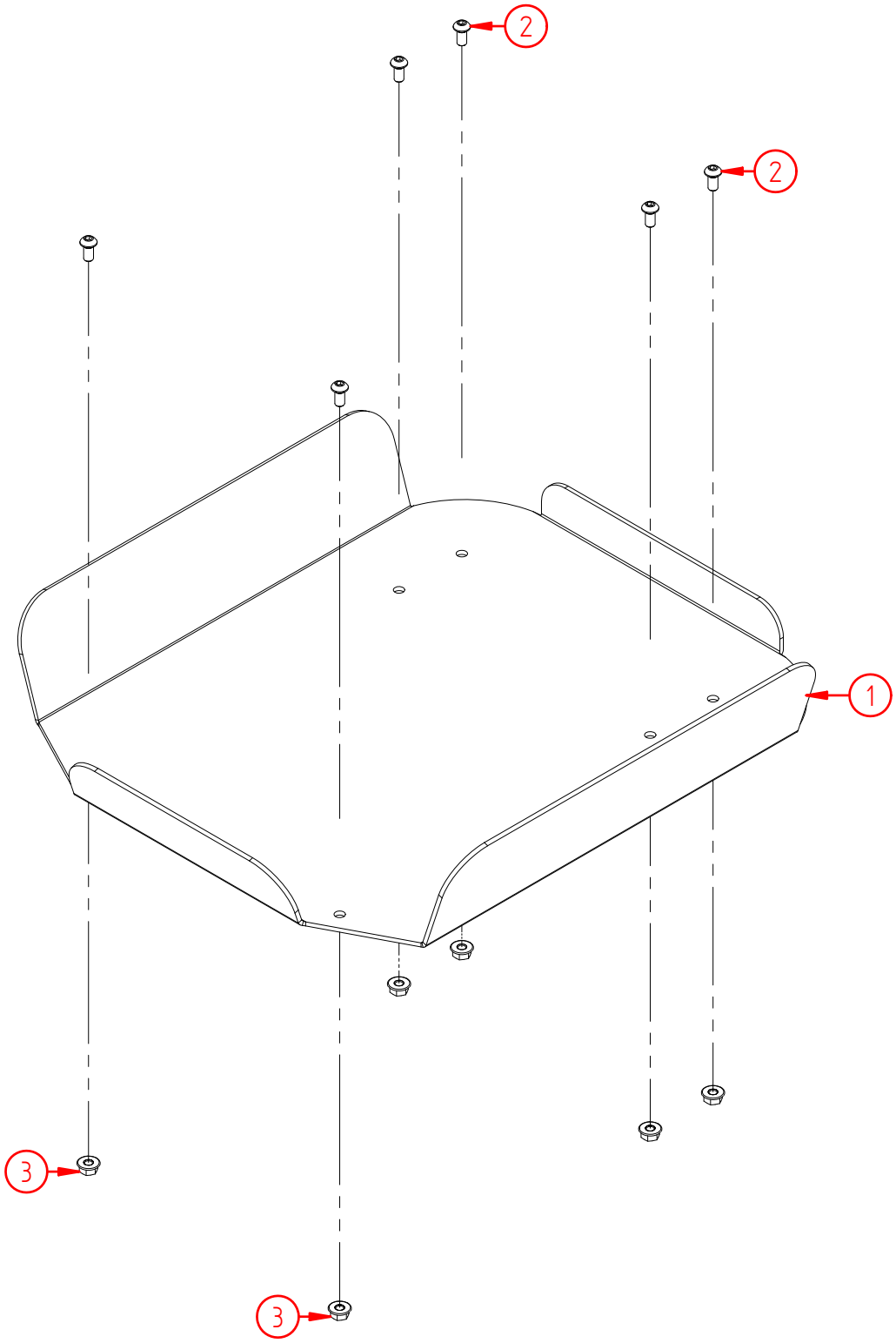

Product name:	**Seat, chassis, comfort 1 - 6**
Product no:	**HP20071152 - HP20071157**
Product reference:	**Balder F/L**
Manufacturer:	Etac AS, www.etac.com
Revision:	**01.01.07**

HP20071152

Pos no.	Part no.	Qty	Description
1	9970	1	Seat chassis Comfort 1 F/L
2	1312	6	Screw, hexagon socket pan head M6x12 ISO7380 Elzink 10,9
3	1039	6	Nut, tensilock M6 DIN 6923 Goldfinish 8,8

HP20071153

Pos no.	Part no.	Qty	Description
1	9975	1	Seat chassis Comfort 2 F/L
2	1312	6	Screw, hexagon socket pan head M6x12 ISO7380 Elzink 10,9
3	1039	6	Nut, tensilock M6 DIN 6923 Goldfinish 8,8

HP20071154

Pos no.	Part no.	Qty	Description
1	9980	1	Seat chassis Comfort 3 F/L
2	1312	6	Screw, hexagon socket pan head M6x12 ISO7380 Elzink 10,9
3	1039	6	Nut, tensilock M6 DIN 6923 Goldfinish 8,8

HP20071155

Pos no.	Part no.	Qty	Description
1	11741	1	Seat chassis Comfort 4 F/L (Alu)
2	1312	6	Screw, hexagon socket pan head M6x12 ISO7380 Elzink 10,9
3	1039	6	Nut, tensilock M6 DIN 6923 Goldfinish 8,8

HP20071156

Pos no.	Part no.	Qty	Description
1	9986	1	Seat chassis Comfort 5 F/L
2	1312	6	Screw, hexagon socket pan head M6x12 ISO7380 Elzink 10,9
3	1039	6	Nut, tensilock M6 DIN 6923 Goldfinish 8,8

HP20071157

Pos no.	Part no.	Qty	Description
1	9991	1	Seat chassis Comfort 6 F/L
2	1312	6	Screw, hexagon socket pan head M6x12 ISO7380 Elzink 10,9
3	1039	6	Nut, tensilock M6 DIN 6923 Goldfinish 8,8

Part no.	Qty	Description
.	.	.
.	.	.
.	.	.
.	.	.

Product name:	**Back,anti shear function, Balder F/L/J 240**
Product no:	**HP20071194**
Product reference:	**Balder F/L/J240**
Manufacturer:	Etac AS, www.etac.com
Revision:	**09.08.07**

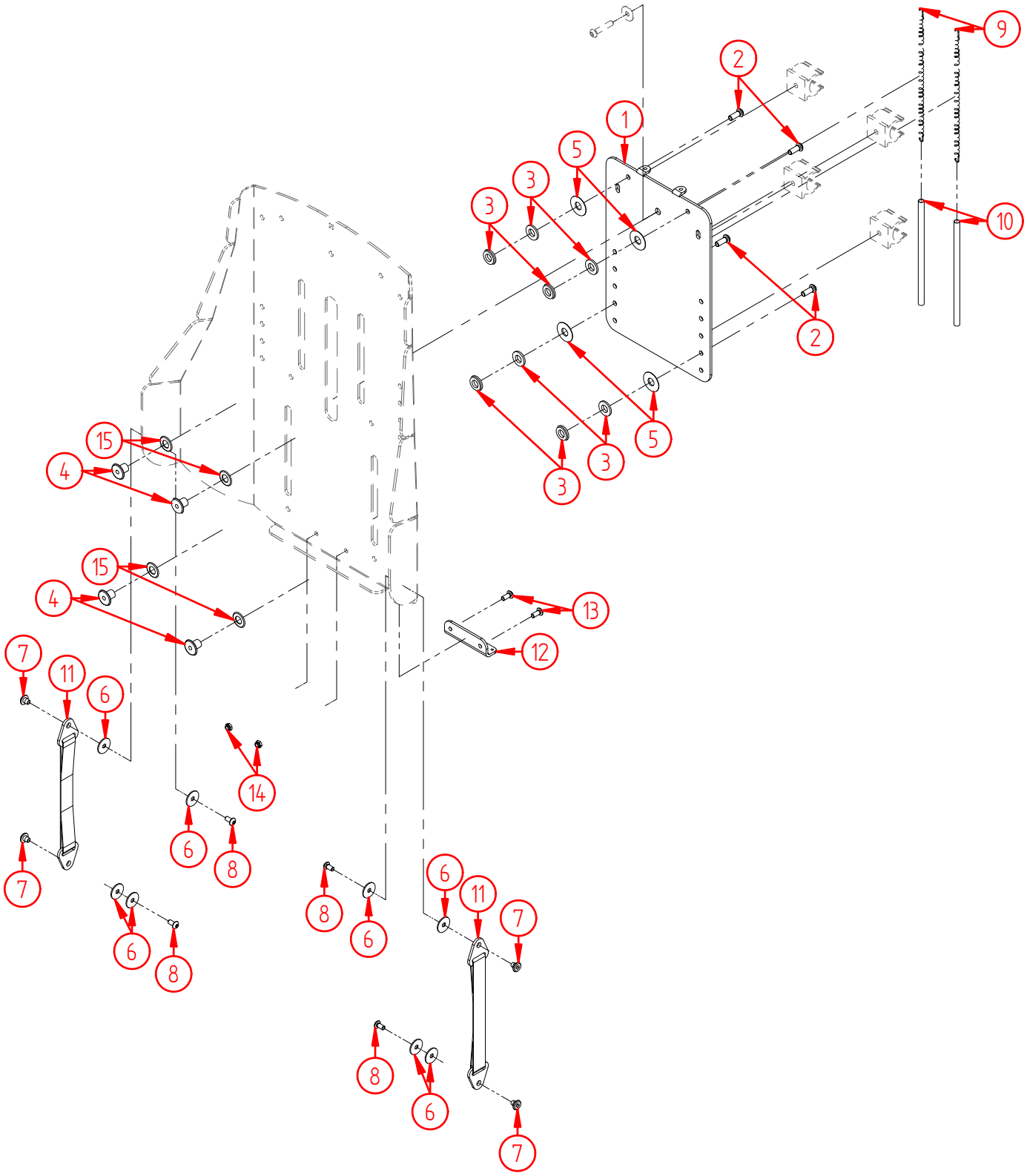

The parts drawn with dash line is for illustration only. These parts are not included in the parts list.

Product name:	**Back,anti shear function, Balder F/L/J 240**
Product no:	**HP20071194**
Product reference:	**Balder F/L/J240**
Manufacturer:	Etac AS, www.etac.com
Revision:	**09.08.07**

Pos no.	Part no.	Qty	Description
1	1330	1	Plate, fitting, for gliding back
2	1107	4	Screw, hexagon socket pan head M6x16 ISO7380 Elzink 10,9
3	1329	8	Washer, nylon black, ø19,2x10x3,1
4	1313	4	Nut for gliding back
5	4271	4	Washer, nylon black, ø25,5x10,2x1,6
6	3735	8	Washer M5x20 DIN 522 Elzink
7	4675	4	Brass nut for slipping back
8	4402	4	Screw, hexagon socket pan head M5x10 ISO 7380 Elzink 10,9
9	1327	2	Spring, stretch
10	4343	2 x 0,15	heat-shrinkable tubing 6,4/3,2mm-5m
11	1314	2	Strap for slipping back
12	9968	1	Bracket, spring, anti-shear chassis
13	1208	2	Screw, hexagon socket pan head M5x12 ISO7380 Elzink 10,9
14	1190	2	Nut, nylock M5 DIN 985 Elzink 8,8
15	9584	4	Washer, black pom, Ø20xØ10,2x1mm

Part no.	Qty	Description
.	.	.
.	.	.
.	.	.
.	.	.

Product name:	**Back, chassis, comfort 1 - 2**
Product no:	**HP20071195 - HP20071196**
Product reference:	**Balder F/L**
Manufacturer:	Etac AS, www.etac.com
Revision:	**09.08.07**

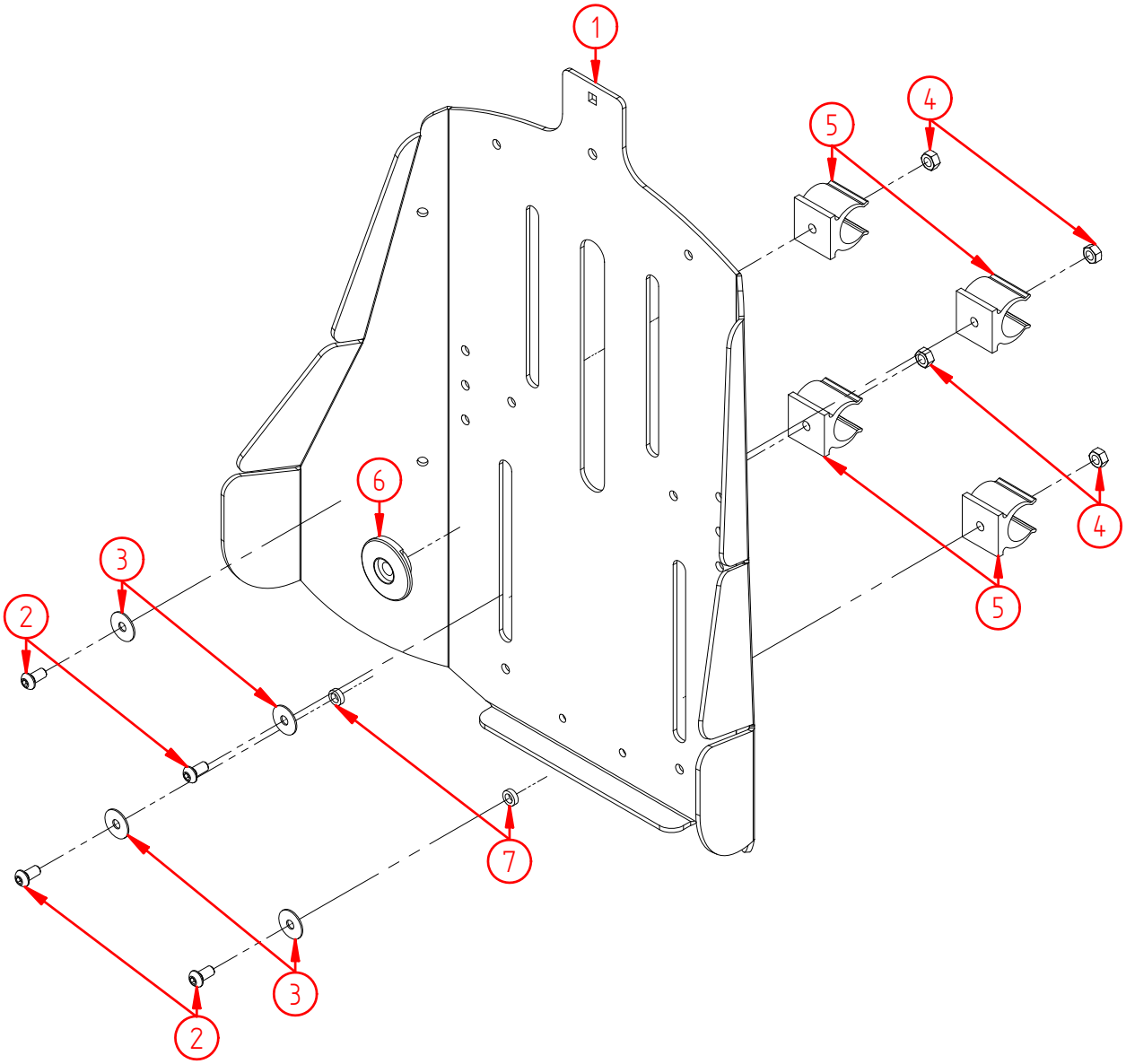

NB! Pos.6 must not be used together with anti shear function

Product name:	**Back, chassis, comfort 1 - 2**
Product no:	**HP20071195 - HP20071196**
Product reference:	**Balder F/L**
Manufacturer:	Etac AS, www.etac.com
Revision:	**09.08.07**

HP20071195

Pos no.	Part no.	Qty	Description
1	9973	1	Seat back chassis,anti-shear,Comfort 1 F/L
2	1312	4	Screw, hexagon socket pan head M6x12 ISO7380 Elzink 10,9
3	1338	4	Washer M6x20 DIN 522 Elzink
4	1089	4	Nut M6 DIN 934 Elzink
5	1277	4	Plastic clip Dia. 25
6	11699	1	Washer, special for locking seatback chassis Comfort 1-6
7	11702	2	Spacer,black, plastic T10/3/6

HP20071196

Pos no.	Part no.	Qty	Description
1	9978	1	Seat back chassis,anti-shear,Comfort 2 F/L
2	1312	4	Screw, hexagon socket pan head M6x12 ISO7380 Elzink 10,9
3	1338	4	Washer M6x20 DIN 522 Elzink
4	1089	4	Nut M6 DIN 934 Elzink
5	1277	4	Plastic clip Dia. 25
6	11699	1	Washer, special for locking seatback chassis Comfort 1-6
7	11702	2	Spacer,black, plastic T10/3/6

Part no.	Qty	Description
.	.	.
.	.	.
.	.	.
.	.	.

Product name:	**Back, chassis, comfort 3 - 6**
Product no:	**HP20071197 - HP20071200**
Product reference:	**Balder F/L**
Manufacturer:	Etac AS, www.etac.com
Revision:	**09.08.07**

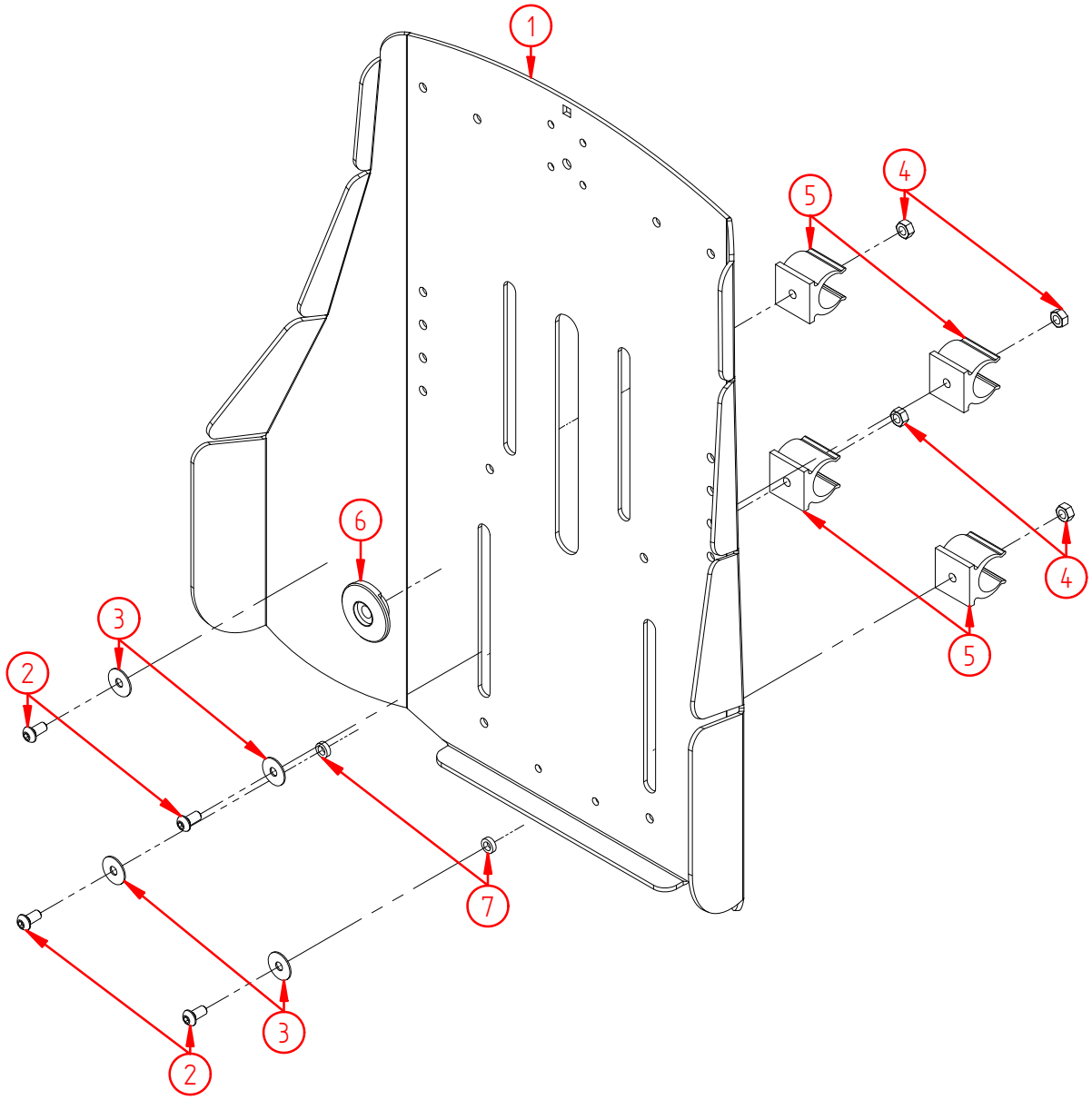

NB! Pos.6 must not be used together with anti shear function

Product name:	Back, chassis, comfort 3 - 6
Product no:	HP20071197 - HP20071200
Product reference:	Balder F/L
Manufacturer:	Etac AS, www.etac.com
Revision:	09.08.07

HP20071197

Pos no.	Part no.	Qty	Description
1	9983	1	Seat back chassis,anti-shear,Comfort 3 F/L
2	1312	4	Screw, hexagon socket pan head M6x12 ISO7380 Elzink 10,9
3	1338	4	Washer M6x20 DIN 522 Elzink
4	1089	4	Nut M6 DIN 934 Elzink
5	1277	4	Plastic clip Dia. 25
6	11699	1	Washer, special for locking seatback chassis Comfort 1-6
7	11702	2	Spacer,black, plastic T10/3/6

HP20071198

Pos no.	Part no.	Qty	Description
1	11742	1	Seat back chassis,anti-shear,Comfort 4 F/L (Alu)
2	1312	4	Screw, hexagon socket pan head M6x12 ISO7380 Elzink 10,9
3	1338	4	Washer M6x20 DIN 522 Elzink
4	1089	4	Nut M6 DIN 934 Elzink
5	1277	4	Plastic clip Dia. 25
6	11699	1	Washer, special for locking seatback chassis Comfort 1-6
7	11702	2	Spacer,black, plastic T10/3/6

HP20071199

Pos no.	Part no.	Qty	Description
1	9989	1	Seat back chassis,anti-shear,Comfort 5 F/L
2	1312	4	Screw, hexagon socket pan head M6x12 ISO7380 Elzink 10,9
3	1338	4	Washer M6x20 DIN 522 Elzink
4	1089	4	Nut M6 DIN 934 Elzink
5	1277	4	Plastic clip Dia. 25
6	11699	1	Washer, special for locking seatback chassis Comfort 1-6
7	11702	2	Spacer,black, plastic T10/3/6

HP20071200

Pos no.	Part no.	Qty	Description
1	9994	1	Seat back chassis,anti-shear,Comfort 6 F/L
2	1312	4	Screw, hexagon socket pan head M6x12 ISO7380 Elzink 10,9
3	1338	4	Washer M6x20 DIN 522 Elzink
4	1089	4	Nut M6 DIN 934 Elzink
5	1277	4	Plastic clip Dia. 25
6	11699	1	Washer, special for locking seatback chassis Comfort 1-6
7	11702	2	Spacer,black, plastic T10/3/6

Part no.	Qty	Description
.	.	.
.	.	.
.	.	.
.	.	.

Product name:	**Back, chassis, J240**
Product no:	**HP20071225**
Product reference:	**Balder J240**
Manufacturer:	Etac AS, www.etac.com
Revision:	**21.02.11**

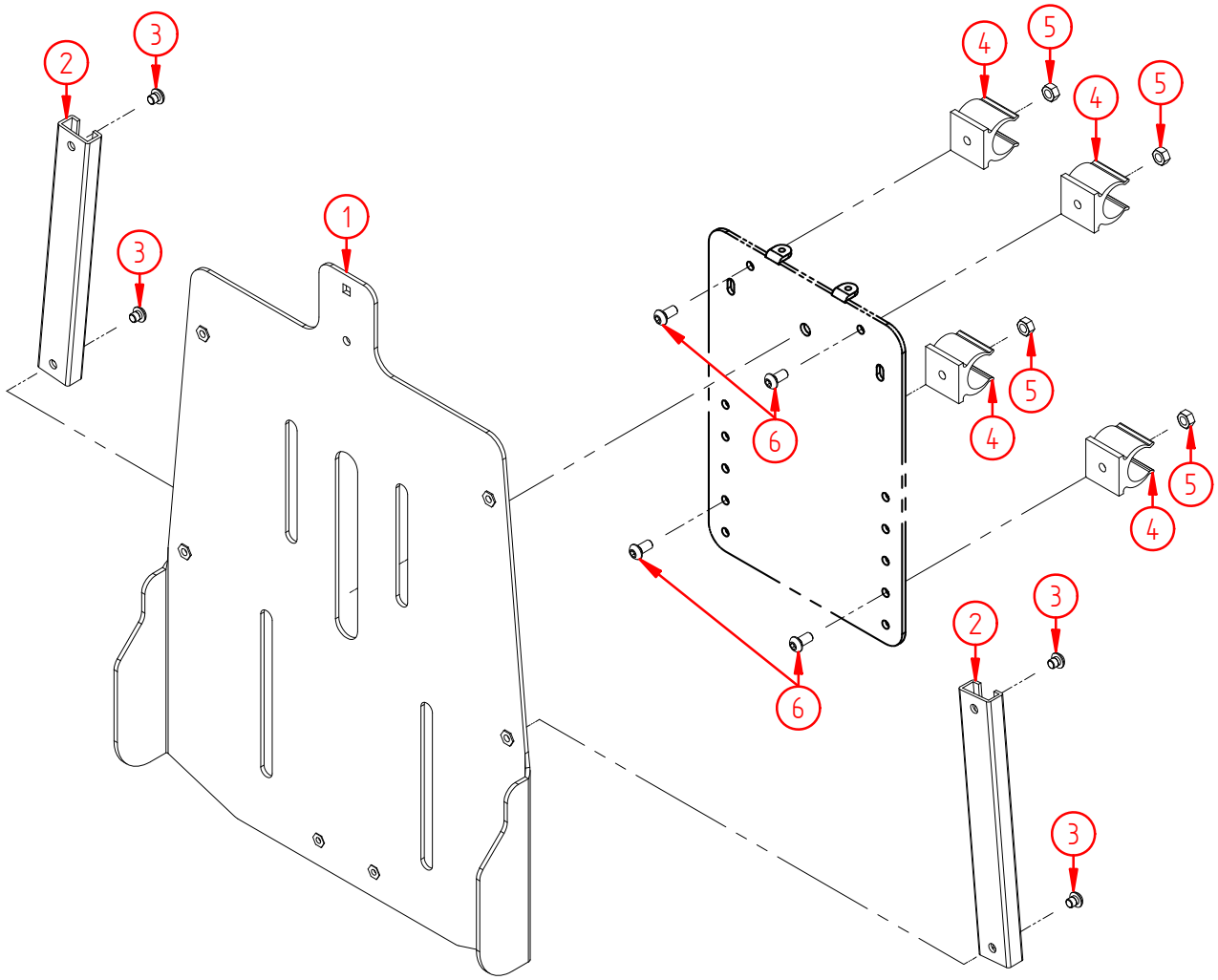

Product name:	**Back, chassis, J240**
Product no:	**HP20071225**
Product reference:	**Balder J240**
Manufacturer:	Etac AS, www.etac.com
Revision:	**21.02.11**

Pos no.	Part no.	Qty	Description
1	10170	1	Seat back chassis,anti-shear, Junior 240
2	10742	2	Rail, seat back, Junior 240- F/L C03VA
3	485157	4	Screw, hexagon socket pan head M6x6 ISO7380 Elzink 10,9
4	1277	4	Plastic clip Dia. 25
5	1089	4	Nut M6 DIN 934 Elzink
6	1312	4	Screw, hexagon socket pan head M6x12 ISO7380 Elzink 10,9

Part no.	Qty	Description
.	.	.
.	.	.
.	.	.
.	.	.

Product name:	**Seat, chassis, J240**
Product no:	**HP20071226**
Product reference:	**Balder J 240**
Manufacturer:	Etac AS, www.etac.com
Revision:	**01.01.07**

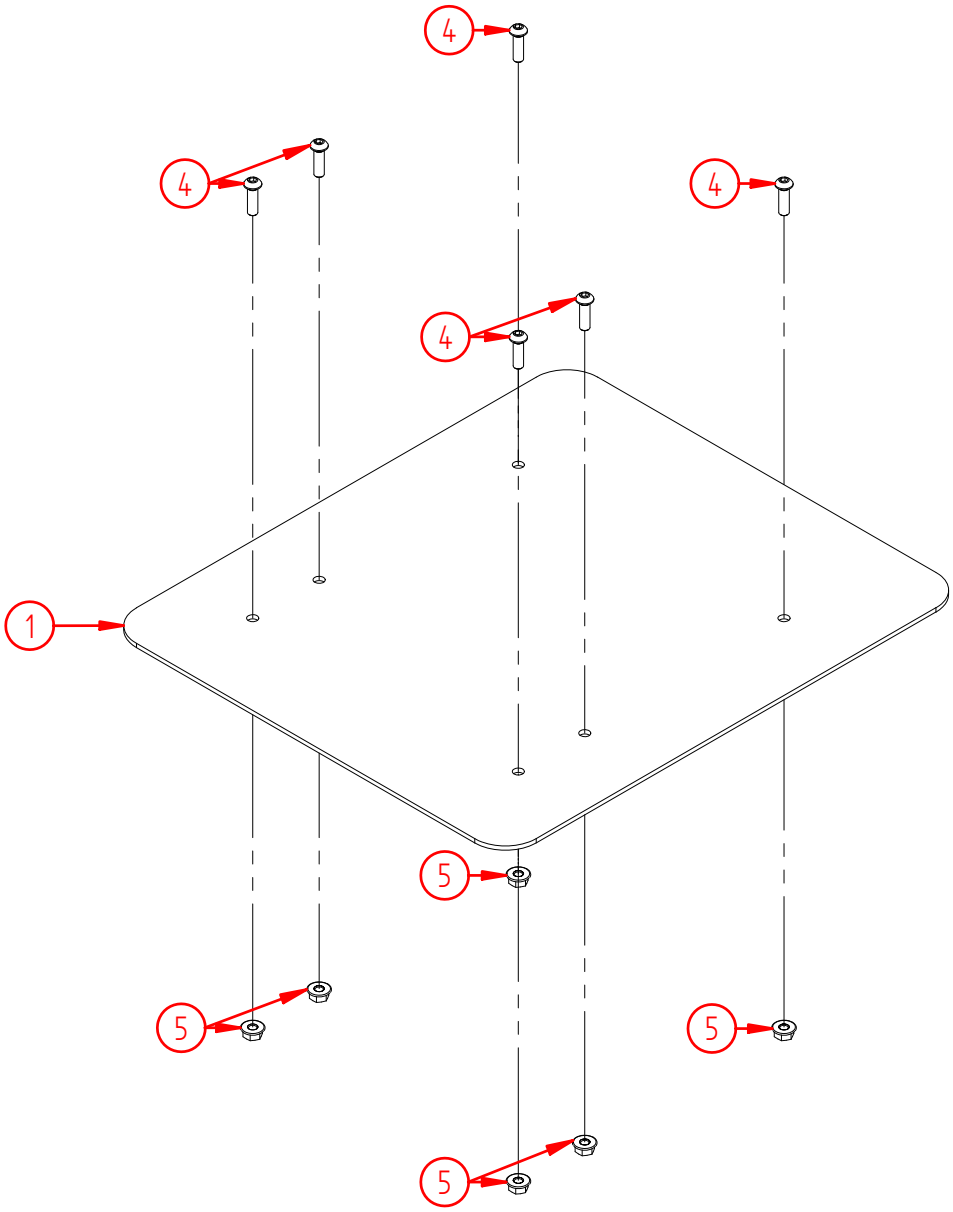

Product name:	**Seat, chassis, J240**
Product no:	**HP20071226**
Product reference:	**Balder J 240**
Manufacturer:	Etac AS, www.etac.com
Revision:	**01.01.07**

Pos no.	Part no.	Qty	Description
1	10165	1	Plate, seat chassis, Junior 240
4	1346	6	Screw, hexagon socket pan head M6x20 DIN 7380 Elzink 10,9
5	1039	6	Nut, tensilock M6 DIN 6923 Goldfinish 8,8

Part no.	Qty	Description
.	.	.
.	.	.
.	.	.
.	.	.

Product name:	**Back, chassis, Junior**
Product no:	**HP20071227**
Product reference:	**Balder J**
Manufacturer:	Etac AS, www.etac.com
Revision:	**21.02.11**

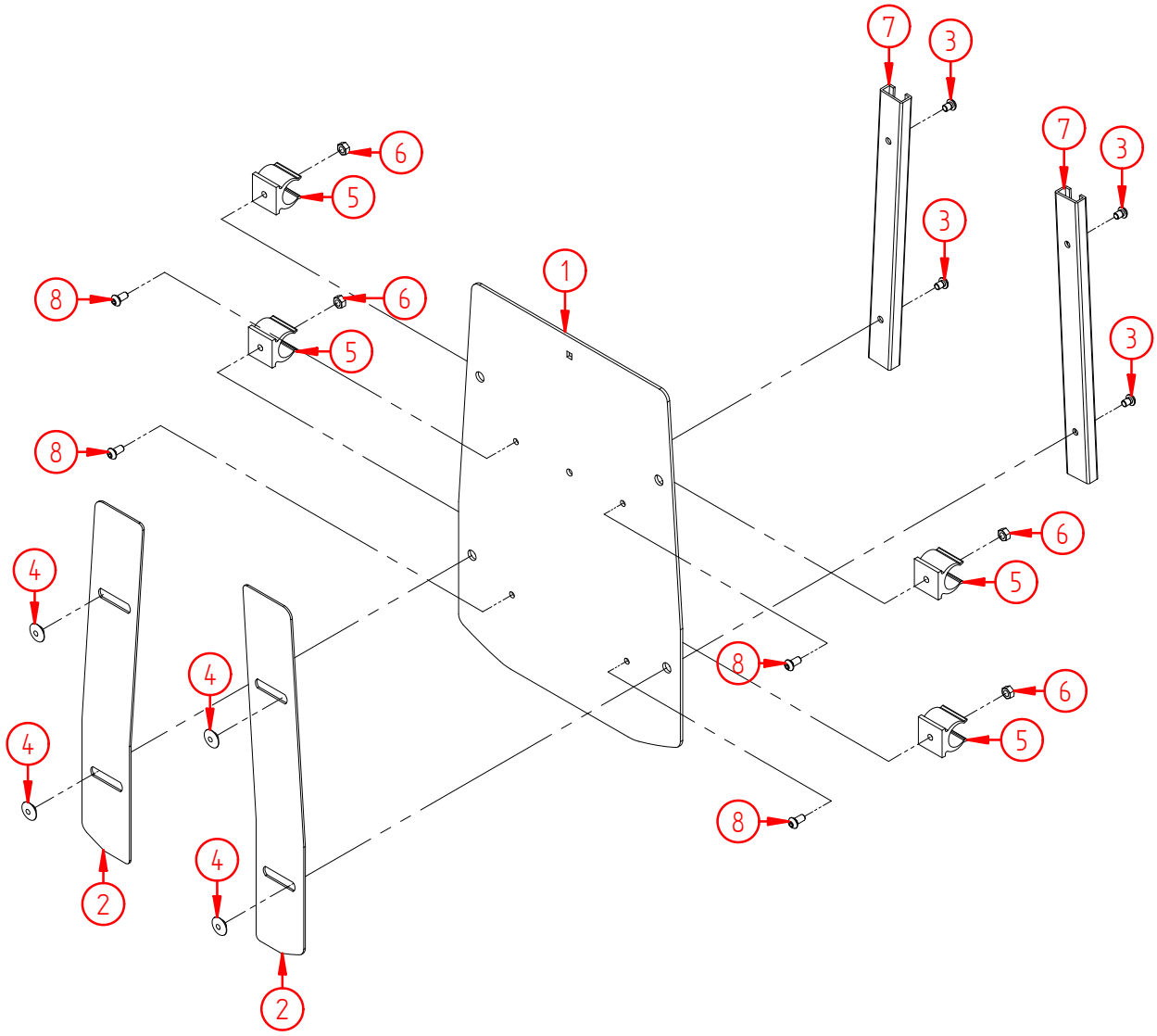

Product name:	**Back, chassis, Junior**
Product no:	**HP20071227**
Product reference:	**Balder J**
Manufacturer:	Etac AS, www.etac.com
Revision:	**21.02.11**

Pos no.	Part no.	Qty	Description
1	10095	1	Main plate, backchassis, J 230/235
2	10096	2	Sideplate, backchassis, J 230/235
3	1212	4	Screw, hexagon socket pan head M6x8 ISO7380 Elzink 10,9
4	10094	4	Nut, special M6, seat/back,J230/235
5	1277	4	Plastic clip Dia. 25
6	1089	4	Nut M6 DIN 934 Elzink
7	10097	2	Rail, seat back, Junior 230/235 C03VA
8	1312	4	Screw, hexagon socket pan head M6x12 ISO7380 Elzink 10,9

Part no.	Qty	Description
.	.	.
.	.	.
.	.	.
.	.	.

Product name:	**Seat, chassis, Junior**
Product no:	**HP20071228**
Product reference:	**Balder J**
Manufacturer:	Etac AS, www.etac.com
Revision:	**01.01.07**

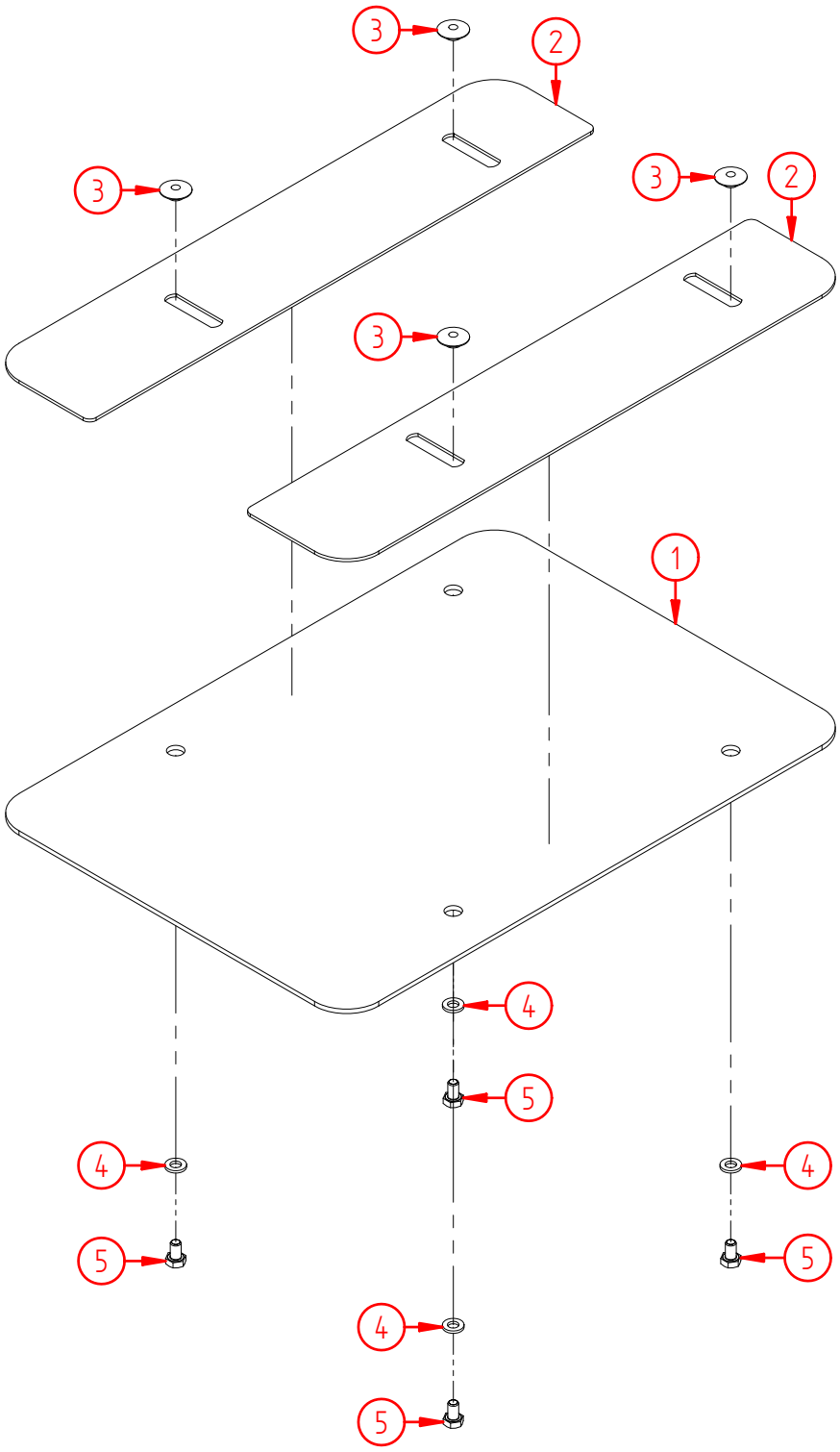

Product name:	**Seat, chassis, Junior**
Product no:	**HP20071228**
Product reference:	**Balder J**
Manufacturer:	Etac AS, www.etac.com
Revision:	**01.01.07**

Pos no.	Part no.	Qty	Description
1	10091	1	Main plate, seatchassis, J 230/235
2	10092	2	Sideplate, seatchassis, J 230/235
3	10094	4	Nut, special M6, seat/back,J230/235
4	1311	4	Washer M6 DIN 125 Elzink
5	2766	4	Screw, hexagon M6x10 DIN 933 Elzink 8,8

Part no.	Qty	Description
.	.	.
.	.	.
.	.	.
.	.	.

Product name:	**Assembly fixture,other seats/ Recaro 24V, Balder F/L**
Product no:	**HP20071256**
Product reference:	**Balder F/L**
Manufacturer:	Etac AS,□□www.etac.com
Revision:	**01.01.07**

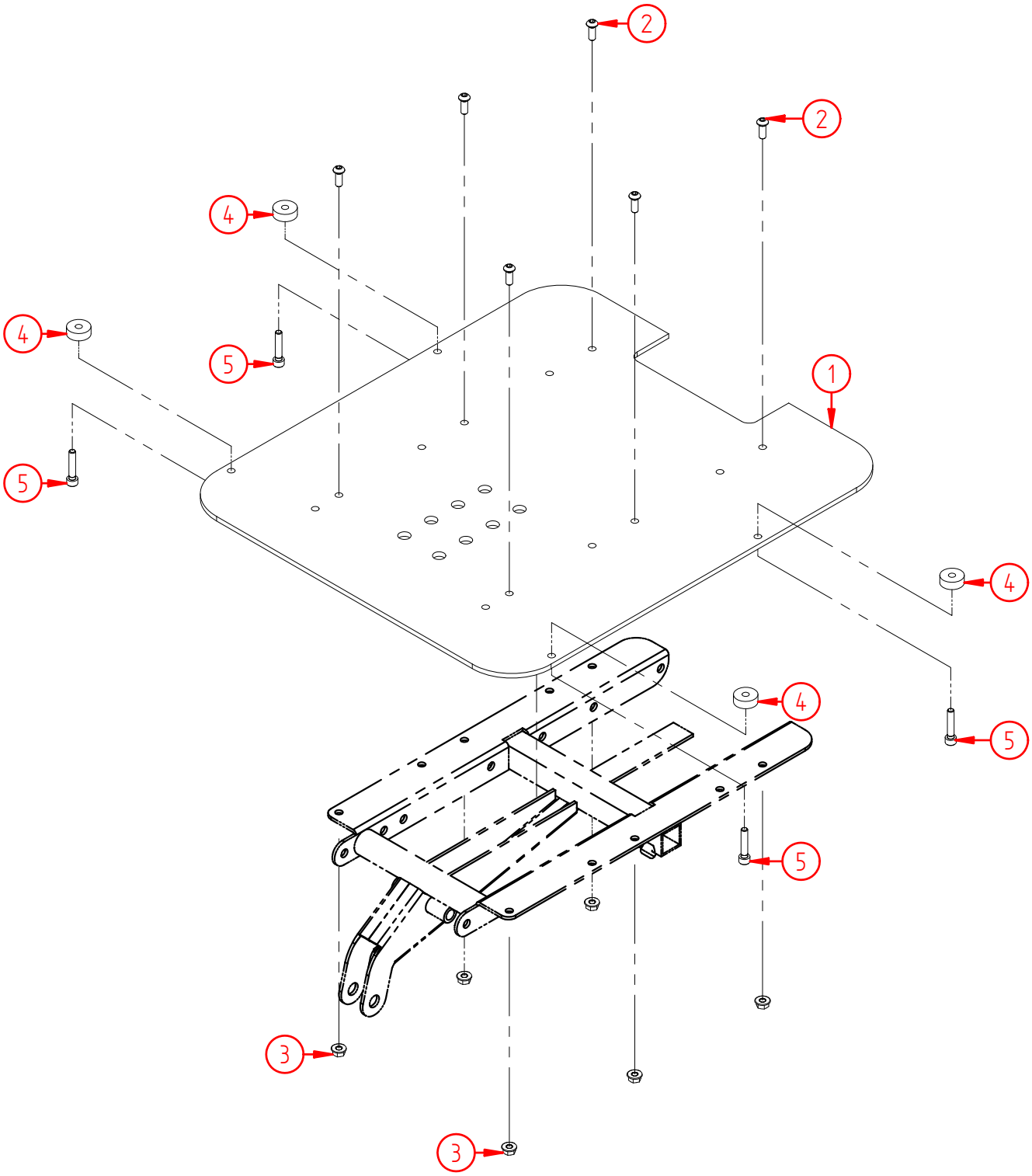

Product name:	**Assembly fixture,other seats/ Recaro 24V, Balder F/L**
Product no:	**HP20071256**
Product reference:	**Balder F/L**
Manufacturer:	Etac AS, www.etac.com
Revision:	**01.01.07**

Pos no.	Part no.	Qty	Description
1	4143	1	Plate,seat fixation, universal sete
2	1107	6	Screw, hexagon socket pan head M6x16 ISO7380 Elzink 10,9
3	1039	6	Nut, tensilock M6 DIN 6923 Goldfinish 8,8
4	10020	4	Spacer, Black nylon, T22/08/6,5
5	3740	4	Screw, hexagon socket M6x30 DIN 912 Elzink 8,8

Part no.	Qty	Description
.	.	.
.	.	.
.	.	.
.	.	.

Product name:	**Assembly fixture, Recaro 12V, Balder F/L**
Product no:	**HP20071257**
Product reference:	**Balder F/L**
Manufacturer:	Etac AS, www.etac.com
Revision:	**01.01.07**

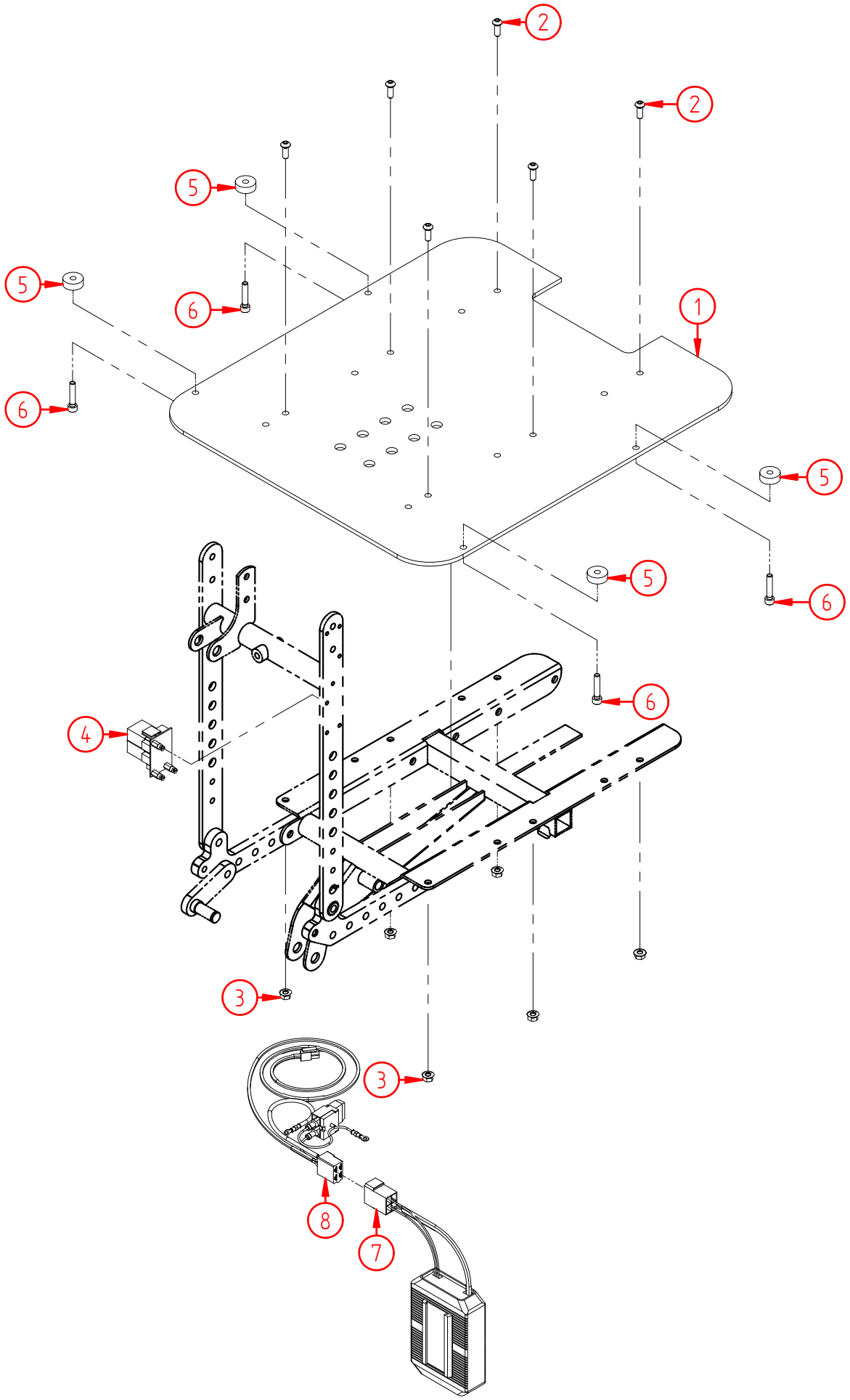

Product name:	**Assembly fixture, Recaro 12V, Balder F/L**
Product no:	**HP20071257**
Product reference:	**Balder F/L**
Manufacturer:	Etac AS, www.etac.com
Revision:	**01.01.07**

Pos no.	Part no.	Qty	Description
1	4143	1	Plate,seat fixation, universal sete
2	1107	6	Screw, hexagon socket pan head M6x16 ISO7380 Elzink 10,9
3	1039	6	Nut, tensilock M6 DIN 6923 Goldfinish 8,8
4	4785	1	Relay for Recaro seat F/L
5	10020	4	Spacer, Black nylon, T22/08/6,5
6	3740	4	Screw, hexagon socket M6x30 DIN 912 Elzink 8,8
7	3733	1	Converter 24 to 12 volt DC/DC DX-ACC1, Recaro
8	4145	1	Wiring set, Recaro universal seat

Part no.	Qty	Description
.	.	.
.	.	.
.	.	.
.	.	.

Product name:	**Seat, hard plate,adj., W:38-42 D:38-45 Balder F/L**
Product no:	**HP20071304**
Product reference:	**Balder F/L**
Manufacturer:	Etac AS, www.etac.com
Revision:	**01.01.07**

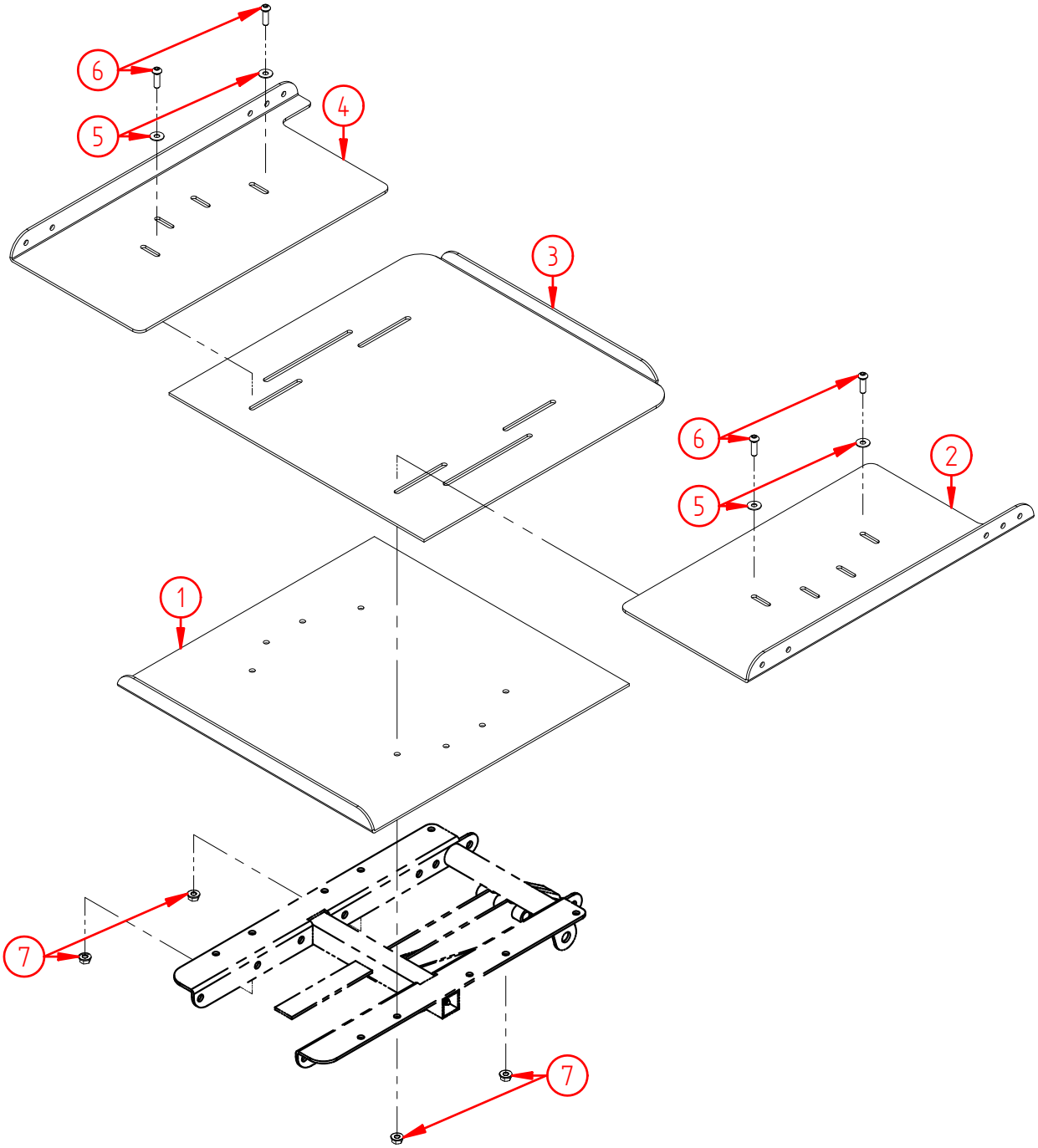

Product name:	**Seat, hard plate,adj., W:38-42 D:38-45 Balder F/L**
Product no:	**HP20071304**
Product reference:	**Balder F/L**
Manufacturer:	Etac AS, www.etac.com
Revision:	**01.01.07**

Pos no.	Part no.	Qty	Description
1	11727	1	Baseplate, hard plate,adj., W:38-42 D:38-45 F/L
2	11731	1	Sideplate, LH, hard plate,adj., W:38-42 D:38-45 F/L
3	11729	1	Backplate, hard plate,adj., W:38-42 D:38-45 F/L
4	11733	1	Sideplate, RH, hard plate,adj., W:38-42 D:38-45 F/L
5	1200	4	Sleeve M6x15 DIN 522 Elzink
6	1346	4	Screw, hexagon socket pan head M6x20 DIN 7380 Elzink 10,9
7	1039	4	Nut, tensilock M6 DIN 6923 Goldfinish 8,8

Part no.	Qty	Description
.	.	.
.	.	.
.	.	.
.	.	.

Product name:	**Seat, hard plate,adj., W:42-45 D:45-52 Balder F/L**
Product no:	**HP20071305**
Product reference:	**Balder F/L**
Manufacturer:	Etac AS, www.etac.com
Revision:	**01.01.07**

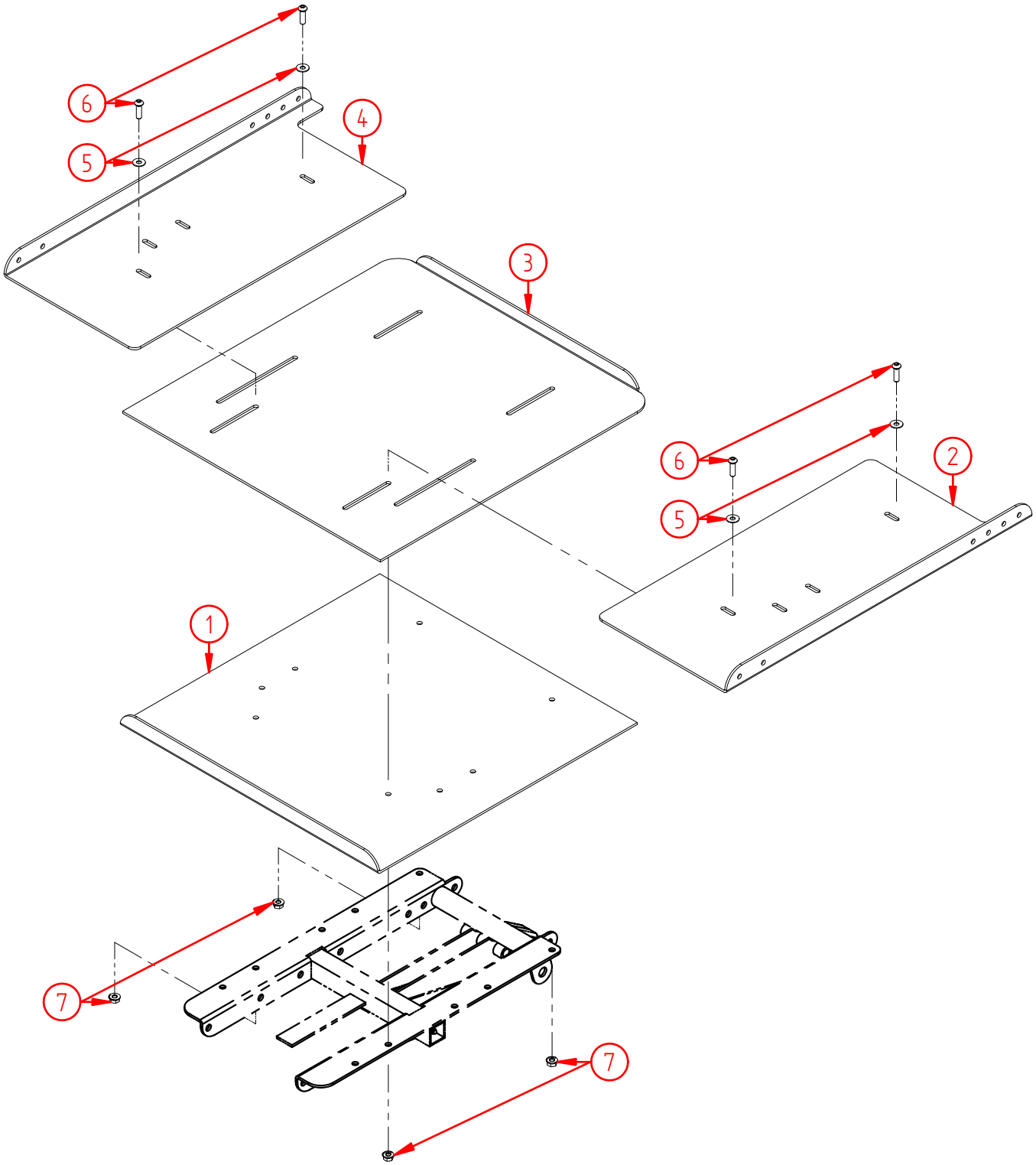

Product name:	**Seat, hard plate,adj., W:42-45 D:45-52 Balder F/L**
Product no:	**HP20071305**
Product reference:	**Balder F/L**
Manufacturer:	Etac AS, www.etac.com
Revision:	**01.01.07**

Pos no.	Part no.	Qty	Description
1	11728	1	Baseplate, hard plate,adj., W:42-45 D:45-52 F/L
2	11732	1	Sideplate, LH, hard plate,adj., W:42-45 D:45-52 F/L
3	11730	1	Backplate, hard plate,adj., W:42-45 D:45-52 F/L
4	11734	1	Sideplate, RH, hard plate,adj., W:42-45 D:45-52 F/L
5	1200	4	Sleeve M6x15 DIN 522 Elzink
6	1346	4	Screw, hexagon socket pan head M6x20 DIN 7380 Elzink 10,9
7	1039	4	Nut, tensilock M6 DIN 6923 Goldfinish 8,8

Part no.	Qty	Description
.	.	.
.	.	.
.	.	.
.	.	.

06. Headrest

Product name:	**Headrest, fastner, Balder F/L/J**
Product no:	**HP20071146**
Product reference:	**Balder F/L/J**
Manufacturer:	Etac AS, www.etac.com
Revision:	**01.01.07**

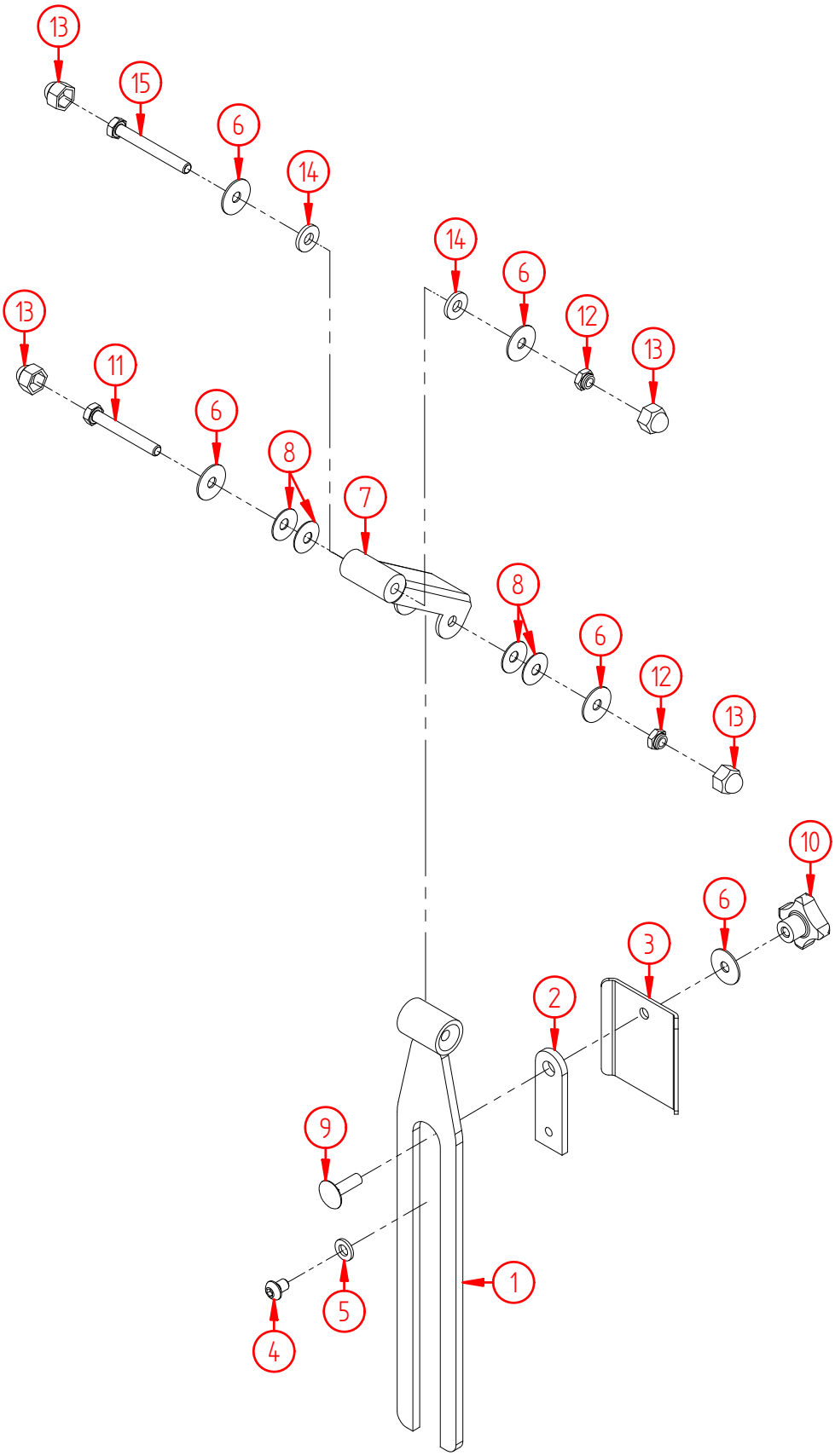

Product name:	**Headrest, fastner, Balder F/L/J**
Product no:	**HP20071146**
Product reference:	**Balder F/L/J**
Manufacturer:	Etac AS, www.etac.com
Revision:	**01.01.07**

Pos no.	Part no.	Qty	Description
1	9943	1	Slidebracket, headrest, Comfort 1-3, J 240
2	9944	1	Slideplate, headrest, Comfort 1-3, Junior 240
3	9945	1	Steeringplate, headrest, Comfort 1-3, Junior 240
4	1212	1	Screw, hexagon socket pan head M6x8 ISO7380 Elzink 10,9
5	1311	1	Washer M6 DIN 125 Elzink
6	1338	5	Washer M6x20 DIN 522 Elzink
7	9946	1	Toggle bracket,headrest,Comfort 1-3,Junior
8	4788	4	Diskspring SF-TAF 18x6, 2x0,7
9	9947	1	Screw, locking w/nut, M6x20 DIN 603
10	9952	1	Lever, M6 internal thread, 4 arms
11	9948	1	Screw, hexagon M6x45 DIN 933 Elzink 8,8
12	1157	2	Nut, nylock M6 DIN 985 Elzink 8,8
13	1192	4	Nut cover BK10 M6
14	9949	2	Spacer, Black plastic, T15/2/6,5
15	2736	1	Screw, hexagon M6x50 DIN 933 Elzink 8,8

Part no.	Qty	Description
.	.	.
.	.	.
.	.	.
.	.	.

Product name:	**Headrest, pad, big, Balder F/L**
Product no:	**HP20071147**
Product reference:	**Balder F/L**
Manufacturer:	Etac AS, www.etac.com
Revision:	**01.01.07**

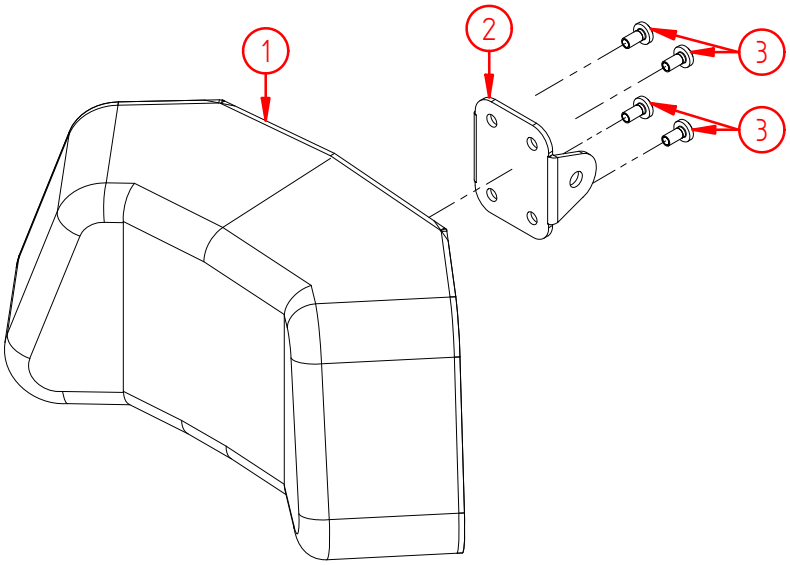

Product name:	**Headrest, pad, small, Balder F/L**
Product no:	**HP20071148**
Product reference:	**Balder F/L**
Manufacturer:	Etac AS, www.etac.com
Revision:	**01.01.07**

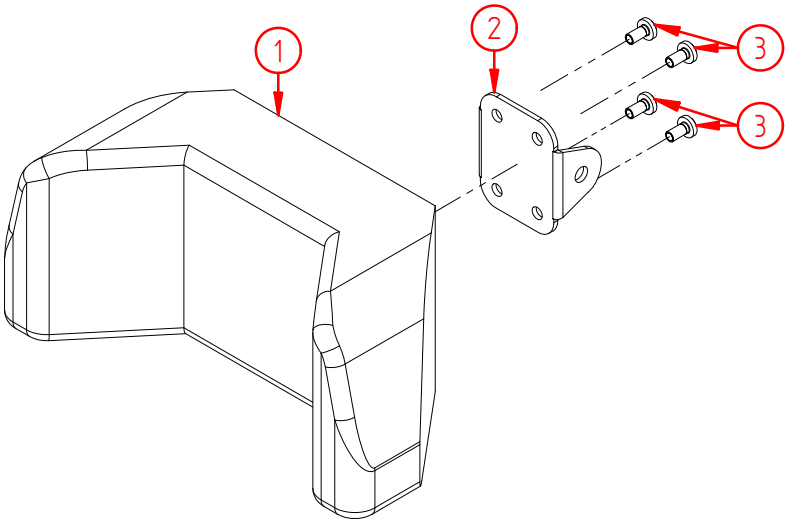

Product name:	**Headrest, pad, big, Balder F/L**
Product no:	**HP20071147**
Product reference:	**Balder F/L**
Manufacturer:	Etac AS, www.etac.com
Revision:	**01.01.07**

Pos no.	Part no.	Qty	Description
1	1194	1	Headrest pad, Comfort 4-6
2	1195	1	Bracket for the headrest pad F/L/J
3	1220	4	Screw, hexagon M4x8, selfthreading Elzink

Product name:	**Headrest, pad, small, Balder F/L**
Product no:	**HP20071148**
Product reference:	**Balder F/L**
Manufacturer:	Etac AS, www.etac.com
Revision:	**01.01.07**

Pos no.	Part no.	Qty	Description
1	9951	1	Headrest pad, Comfort 1-3
2	1195	1	Bracket for the headrest pad F/L/J
3	1220	4	Screw, hexagon M4x8, selfthreading Elzink

Product name:	**Headrest, pad, small, red, Balder J**
Product no:	**HP20071149**
Product reference:	**Balder J**
Manufacturer:	Etac AS, www.etac.com
Revision:	**01.01.07**

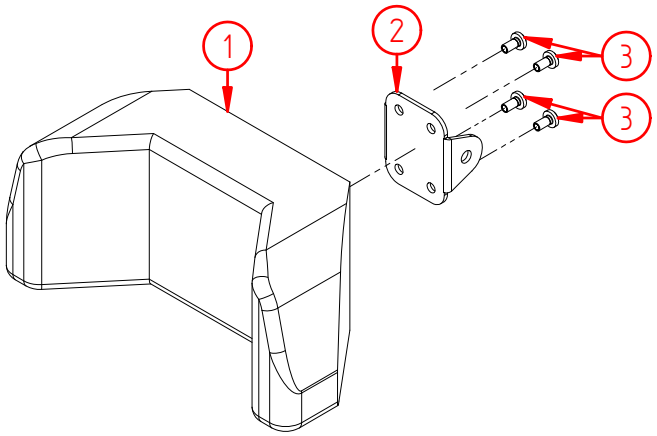

Product name:	**Headrest, pad, small, blue, Balder J**
Product no:	**HP20071150**
Product reference:	**Balder J**
Manufacturer:	Etac AS, www.etac.com
Revision:	**01.01.07**

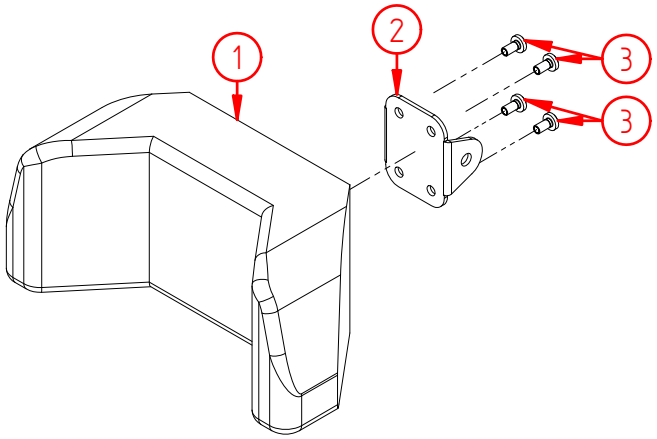

Product name:	**Headrest, pad, small, green, Balder J**
Product no:	**HP20071151**
Product reference:	**Balder J**
Manufacturer:	Etac AS, www.etac.com
Revision:	**01.01.07**

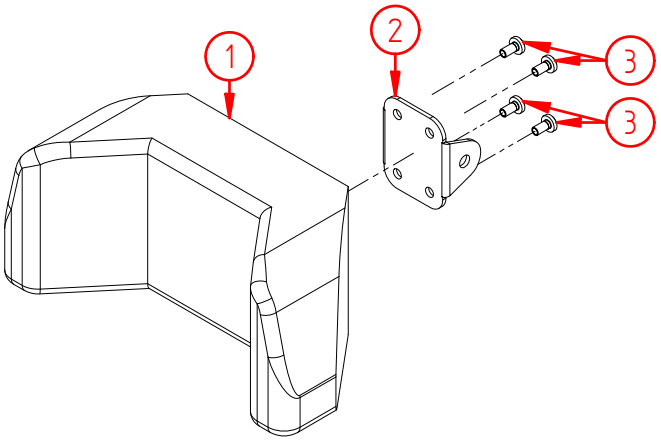

Product name:	**Headrest, pad, small, red, Balder J**
Product no:	**HP20071149**
Product reference:	**Balder J**
Manufacturer:	Etac AS,□□www.etac.com
Revision:	**01.01.07**

Pos no.	Part no.	Qty	Description
1	10076	1	Headrest pad, red, Balder Junior
2	1195	1	Bracket for the headrest pad F/L/J
3	1220	4	Screw, hexagon M4x8, selfthreading Elzink

Product name:	**Headrest, pad, small, blue, Balder J**
Product no:	**HP20071150**
Product reference:	**Balder J**
Manufacturer:	Etac AS,□□www.etac.com
Revision:	**01.01.07**

Pos no.	Part no.	Qty	Description
1	10077	1	Headrest pad, blue, Balder Junior
2	1195	1	Bracket for the headrest pad F/L/J
3	1220	4	Screw, hexagon M4x8, selfthreading Elzink

Product name:	**Headrest, pad, small, green, Balder J**
Product no:	**HP20071151**
Product reference:	**Balder J**
Manufacturer:	Etac AS,□□www.etac.com
Revision:	**01.01.07**

Pos no.	Part no.	Qty	Description
1	10078	1	Headrest pad, green, Balder Junior
2	1195	1	Bracket for the headrest pad F/L/J
3	1220	4	Screw, hexagon M4x8, selfthreading Elzink

07. Armrest

Product name:	**Armrest pads**
Product no:	
Product reference:	**Balder F/L**
Manufacturer:	Etac AS, www.etac.com
Revision:	**01.01.07**

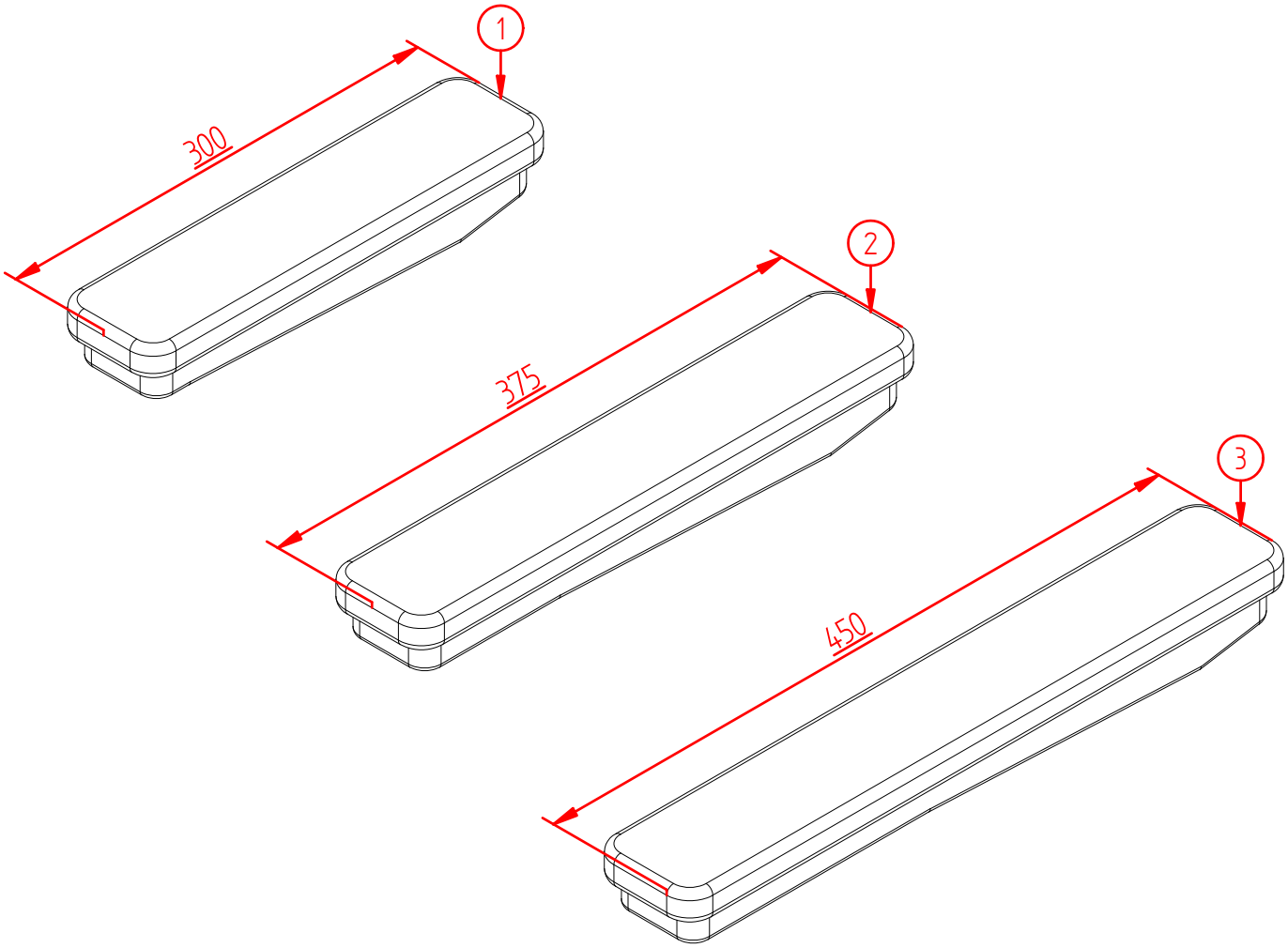

Product name:	**Armrest pads**
Product no:	
Product reference:	**Balder F/L**
Manufacturer:	Etac AS, www.etac.com
Revision:	**01.01.07**

Pos no.	Part no.	Qty	Description
1	10085	1	Armrest pad Comfort 1-2, Junior
2	1079	1	Armrest pad Comfort 3-4
3	10086	1	Armrest pad Comfort 5-6

Part no.	Qty	Description
.	.	.
.	.	.
.	.	.
.	.	.

Product name:	**Armrest fastner, flip-up Comfort 1-2 Balder F/L**
Product no:	**HP20071037**
Product reference:	**Balder F/L**
Manufacturer:	Etac AS, www.etac.com
Revision:	**14.10.10**

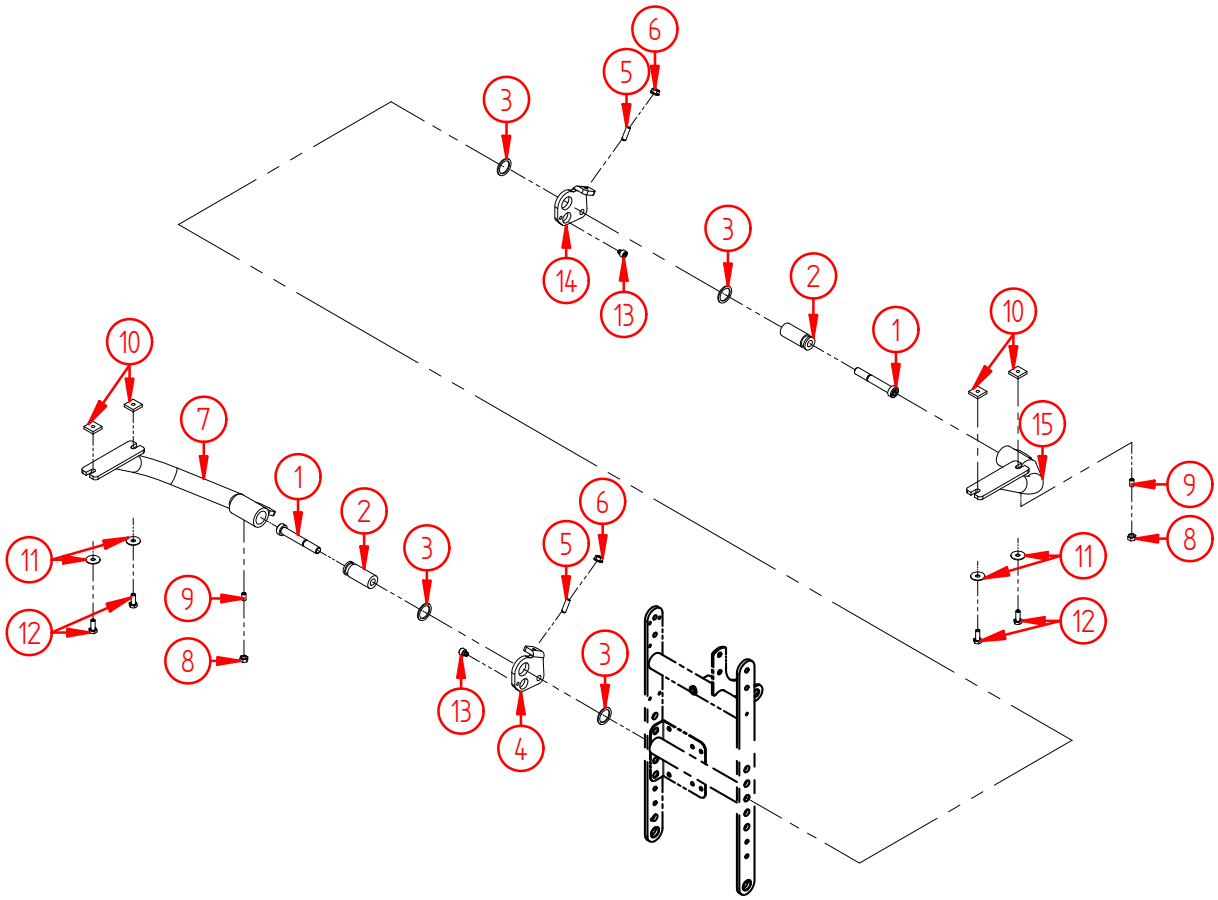

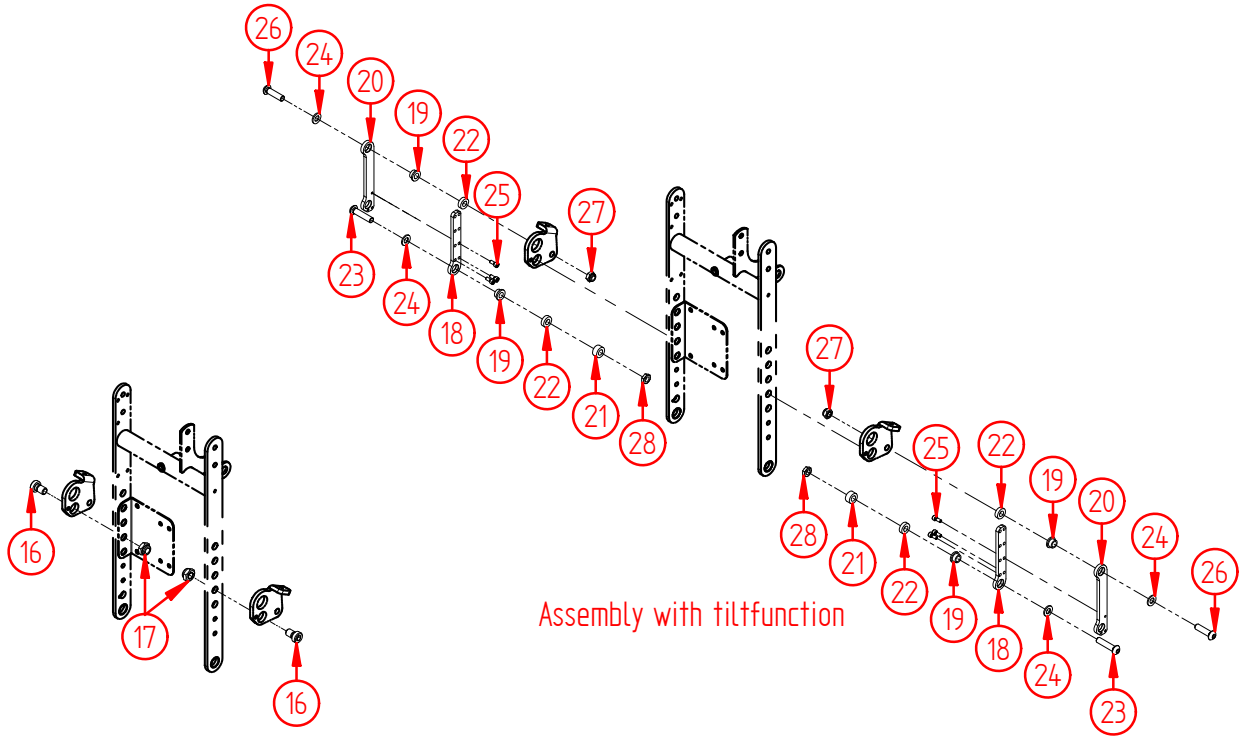

Assembly with tiltfunction

Assembly with stand-up function

Product name:	**Armrest fastner, flip-up Comfort 1-2 Balder F/L**
Product no:	**HP20071037**
Product reference:	**Balder F/L**
Manufacturer:	Etac AS, www.etac.com
Revision:	**14.10.10**

Pos no.	Part no.	Qty	Description
1	1218	2	Screw, hexagon socket head cap M10x70 DIN 6912 Elzink 8,8
2	1090	2	Shaft journal
3	1082	4	Washer, copper 20x26 DIN 7603
4	1093	1	Fixing plate, armrest, RH
5	1096	2	Screw, hexagon set, M6x20 DIN 916 Unplated
6	1039	2	Nut, tensilock M6 DIN 6923 Goldfinish 8,8
7	10204	1	Armrest pipe, RH, Comfort 1-2
8	1089	2	Nut M6 DIN 934 Elzink
9	1088	2	Screw, hexagon set, M6x12 DIN 916 Unplated
10	1276	4	Nut 18x18x4xM6, square, steel
11	1338	4	Washer M6x20 DIN 522 Elzink
12	1084	4	Screw, hexagon M6x16 DIN 933 Elzink 8,8
13	4670	2	Screw, hexagon socket M6x6 DIN 912 Elzink 8,8
14	1092	1	Fixing plate, armrest, LH
15	10205	1	Armrest pipe, LH, Comfort 1-2
16	4922	2	Screw, hexagon socket M10x16 DIN 912 Elzink 8,8
17	1186	2	Nut, nylock M10 DIN 985 Elzink 8,8
18	11451	2	Bar, upper, par. function armrests
19	11450	4	Sleeve w/collar ø16/ø12/ø8,3 L:7,5mm
20	11452	2	Bar, lower, par. function armrests
21	11449	2	Sleeve ø16/ø8,5 L:8mm
22	11246	4	Sleeve, ø16/ø8,3 L:5mm
23	4468	2	Screw, hexagon socket pan head M8x35 DIN 7380 Elzink 8,8
24	1340	4	Washer M8 DIN 125 Elzink
25	4054	6	Screw, hexagon socket M4x10 DIN 912 Elzink 8,8
26	1069	2	Screw, hexagon socket pan head M8x30 DIN 7380 Elzink 10,9
27	1070	2	Nut, nylock M8 DIN 985 El.zink 8,8
28	1337	2	Nut M8, narrow DIN 439 Elzink

Part no.	Qty	Description
.	.	Alternatives:
11941	1	Parts-kit, par.function armrest F/L/J, Left
480085	1	Parts-kit, par.function armrest F/L/J, Right
.	.	.

Product name:	**Armrest fastner, flip-up Comfort 3-4 Balder F/L**
Product no:	**HP20071038**
Product reference:	**Balder F/L**
Manufacturer:	Etac AS, www.etac.com
Revision:	**14.10.10**

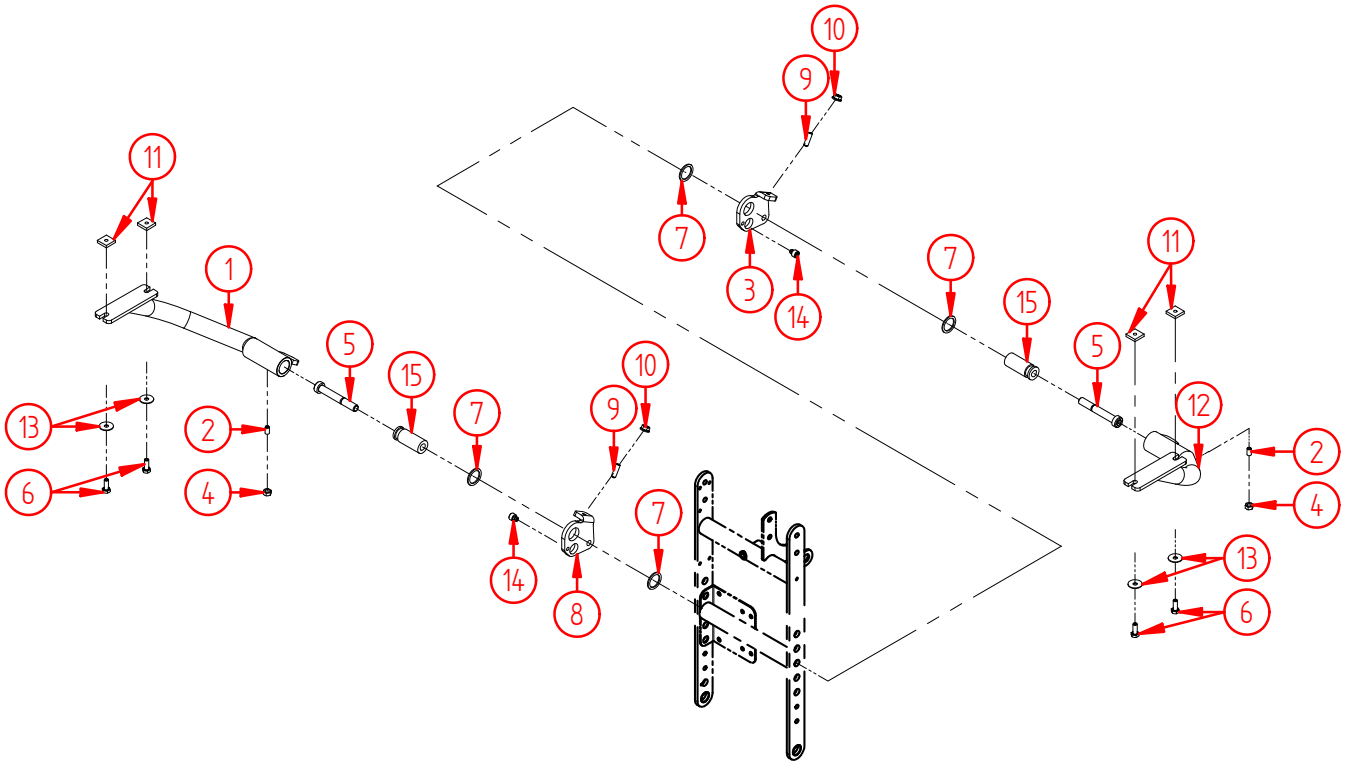

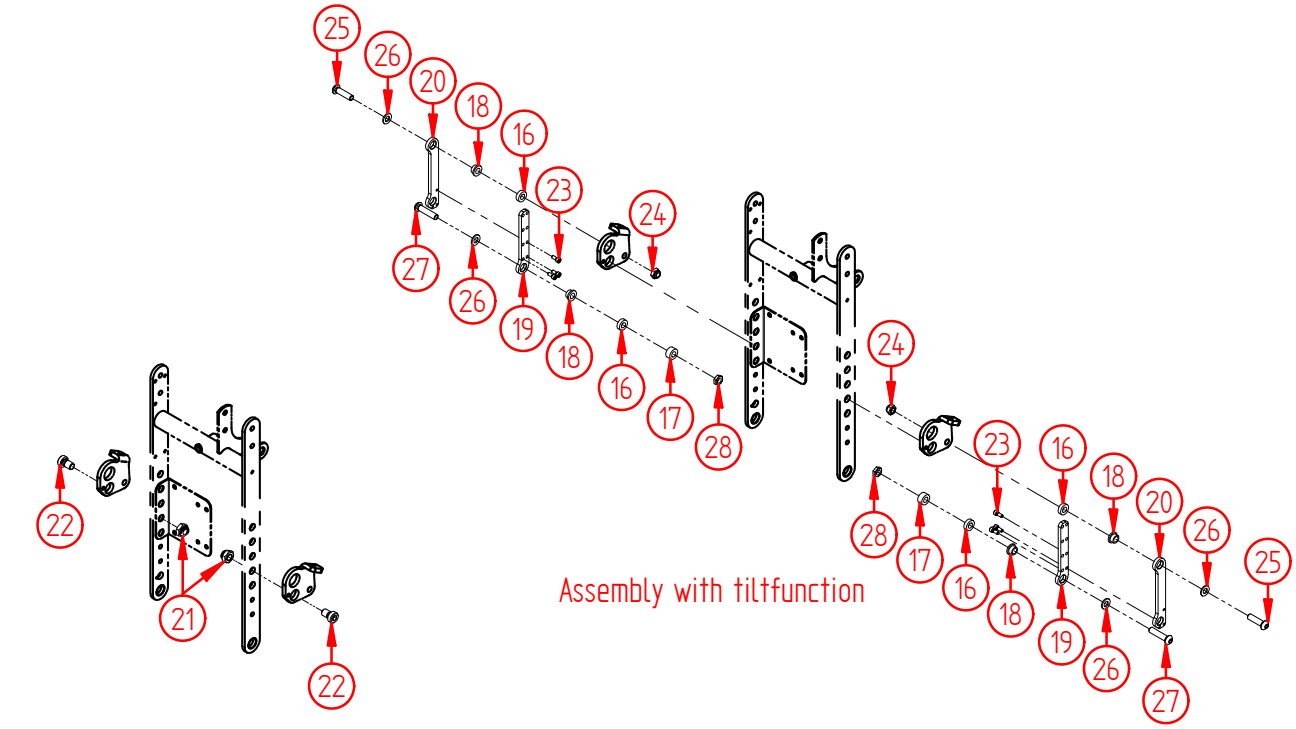

Product name:	**Armrest fastner, flip-up Comfort 3-4 Balder F/L**
Product no:	**HP20071038**
Product reference:	**Balder F/L**
Manufacturer:	Etac AS, www.etac.com
Revision:	**14.10.10**

Pos no.	Part no.	Qty	Description
1	1085	1	Armrest pipe, RH, Comfort 3-4
2	1088	2	Screw, hexagon set, M6x12 DIN 916 Unplated
3	1092	1	Fixing plate, armrest, LH
4	1089	2	Nut M6 DIN 934 Elzink
5	1218	2	Screw, hexagon socket head cap M10x70 DIN 6912 Elzink 8,8
6	1084	4	Screw, hexagon M6x16 DIN 933 Elzink 8,8
7	1082	4	Washer, copper 20x26 DIN 7603
8	1093	1	Fixing plate, armrest, RH
9	1096	2	Screw, hexagon set, M6x20 DIN 916 Unplated
10	1039	2	Nut, tensilock M6 DIN 6923 Goldfinish 8,8
11	1276	4	Nut 18x18x4xM6, square, steel
12	1086	1	Armrest pipe, LH, Comfort 3-4
13	1338	4	Washer M6x20 DIN 522 Elzink
14	4670	2	Screw, hexagon socket M6x6 DIN 912 Elzink 8,8
15	1090	2	Shaft journal
16	11246	4	Sleeve, ø16/ø8,3 L:5mm
17	11449	2	Sleeve ø16/ø8,5 L:8mm
18	11450	4	Sleeve w/collar ø16/ø12/ø8,3 L:7,5mm
19	11451	2	Bar, upper, par. function armrests
20	11452	2	Bar, lower, par. function armrests
21	1186	2	Nut, nylock M10 DIN 985 Elzink 8,8
22	4922	2	Screw, hexagon socket M10x16 DIN 912 Elzink 8,8
23	4054	6	Screw, hexagon socket M4x10 DIN 912 Elzink 8,8
24	1070	2	Nut, nylock M8 DIN 985 El.zink 8,8
25	1069	2	Screw, hexagon socket pan head M8x30 DIN 7380 Elzink 10,9
26	1340	4	Washer M8 DIN 125 Elzink
27	4468	2	Screw, hexagon socket pan head M8x35 DIN 7380 Elzink 8,8
28	1337	2	Nut M8, narrow DIN 439 Elzink

Part no.	Qty	Description
.	.	Alternatives:
11941	1	Parts-kit, par.function armrest F/L/J, Left
480085	1	Parts-kit, par.function armrest F/L/J, Right
.	.	.

Product name:	**Armrest fastner, flip-up Comfort 5-6 Balder F/L**
Product no:	**HP20071039**
Product reference:	**Balder F/L**
Manufacturer:	Etac AS, www.etac.com
Revision:	**14.10.10**

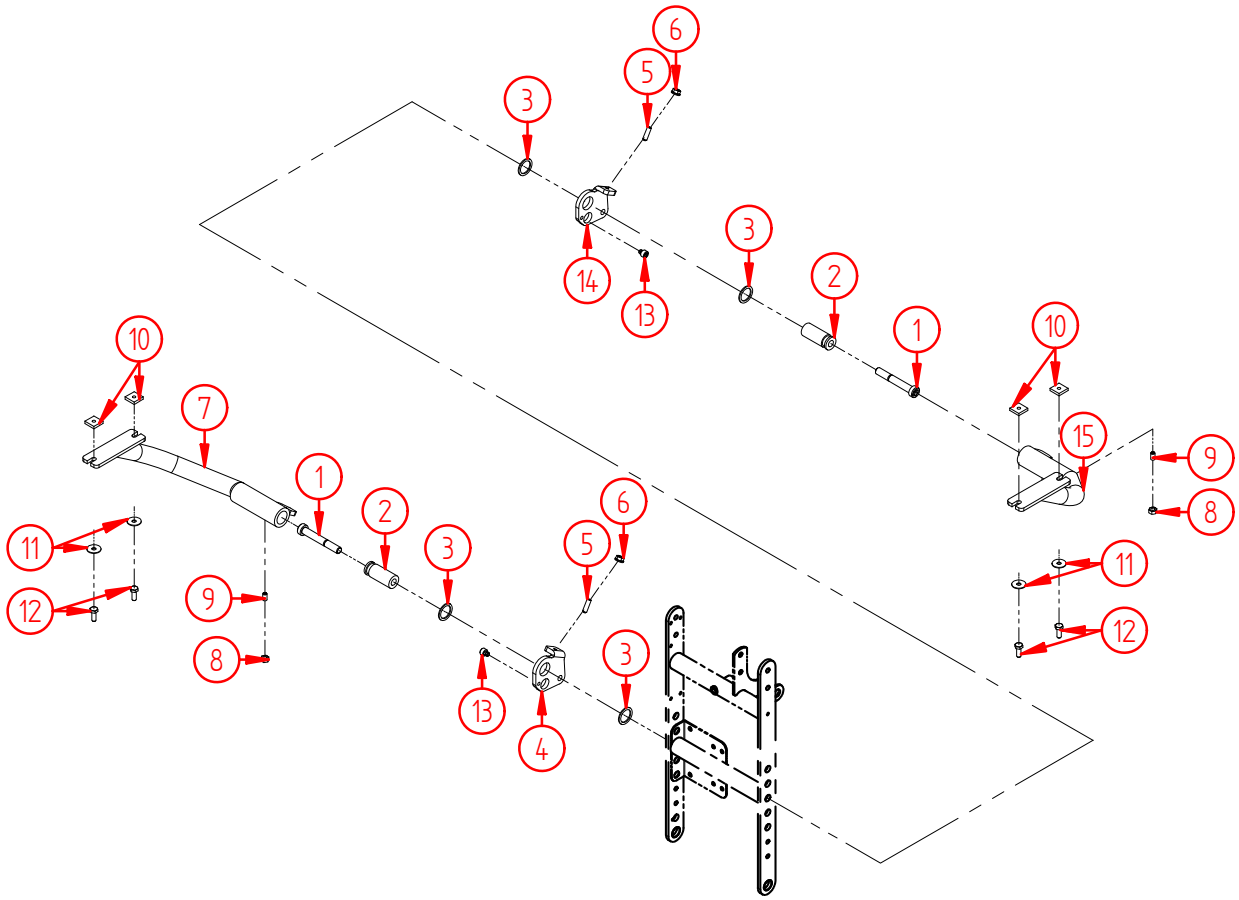

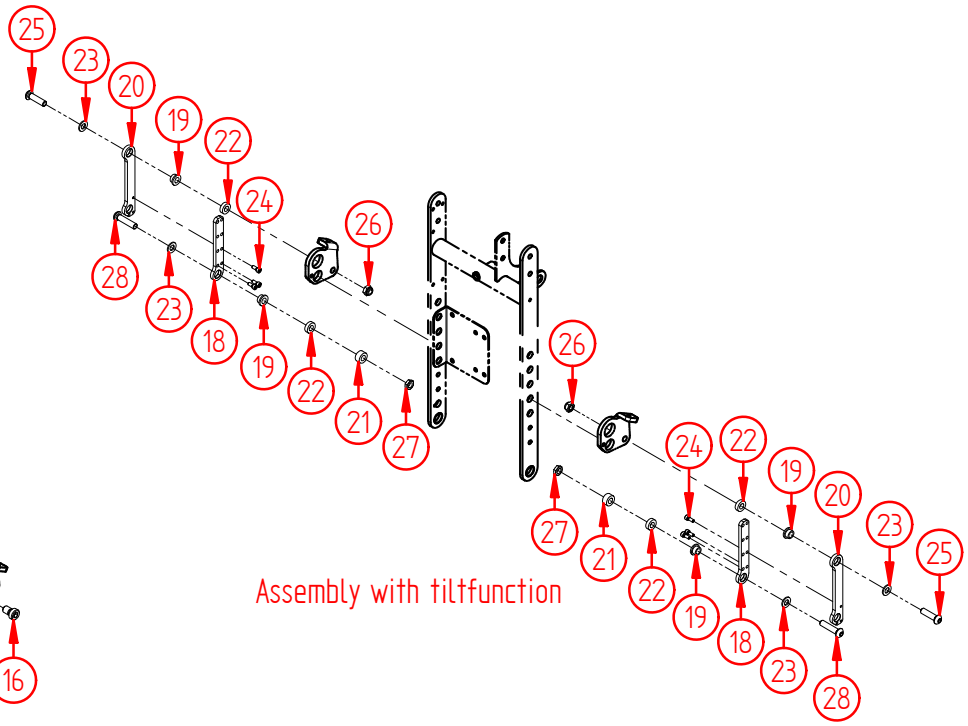

Assembly with tiltfunction

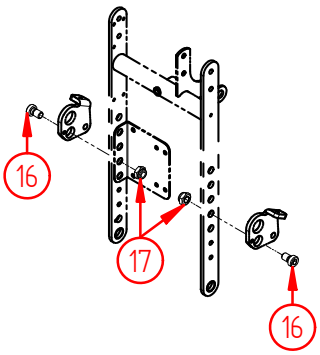

Assembly with stand-up function

Product name:	**Armrest fastner, flip-up Comfort 5-6 Balder F/L**
Product no:	**HP20071039**
Product reference:	**Balder F/L**
Manufacturer:	Etac AS, www.etac.com
Revision:	**14.10.10**

Pos no.	Part no.	Qty	Description
1	1218	2	Screw, hexagon socket head cap M10x70 DIN 6912 Elzink 8,8
2	1090	2	Shaft journal
3	1082	4	Washer, copper 20x26 DIN 7603
4	1093	1	Fixing plate, armrest, RH
5	1096	2	Screw, hexagon set, M6x20 DIN 916 Unplated
6	1039	2	Nut, tensilock M6 DIN 6923 Goldfinish 8,8
7	10206	1	Armrest pipe, RH, Comfort 5-6
8	1089	2	Nut M6 DIN 934 Elzink
9	1088	2	Screw, hexagon set, M6x12 DIN 916 Unplated
10	1276	4	Nut 18x18x4xM6, square, steel
11	1338	4	Washer M6x20 DIN 522 Elzink
12	1084	4	Screw, hexagon M6x16 DIN 933 Elzink 8,8
13	4670	2	Screw, hexagon socket M6x6 DIN 912 Elzink 8,8
14	1092	1	Fixing plate, armrest, LH
15	10207	1	Armrest pipe, LH, Comfort 5-6
16	4922	2	Screw, hexagon socket M10x16 DIN 912 Elzink 8,8
17	1186	2	Nut, nylock M10 DIN 985 Elzink 8,8
18	11451	2	Bar, upper, par. function armrests
19	11450	4	Sleeve w/collar ø16/ø12/ø8,3 L:7,5mm
20	11452	2	Bar, lower, par. function armrests
21	11449	2	Sleeve ø16/ø8,5 L:8mm
22	11246	4	Sleeve, ø16/ø8,3 L:5mm
23	1340	4	Washer M8 DIN 125 Elzink
24	4054	6	Screw, hexagon socket M4x10 DIN 912 Elzink 8,8
25	1069	2	Screw, hexagon socket pan head M8x30 DIN 7380 Elzink 10,9
26	1070	2	Nut, nylock M8 DIN 985 El.zink 8,8
27	1337	2	Nut M8, narrow DIN 439 Elzink
28	4468	2	Screw, hexagon socket pan head M8x35 DIN 7380 Elzink 8,8

Part no.	Qty	Description
.	.	Alternatives:
11941	1	Parts-kit, par.function armrest F/L/J, Left
480085	1	Parts-kit, par.function armrest F/L/J, Right
.	.	.

Product name:	**Armrest fastner, flip-up, height adj. Comfort 1-2 Balder F/L**
Product no:	**HP20071040**
Product reference:	**Balder F/L**
Manufacturer:	Etac AS, www.etac.com
Revision:	**14.10.10**

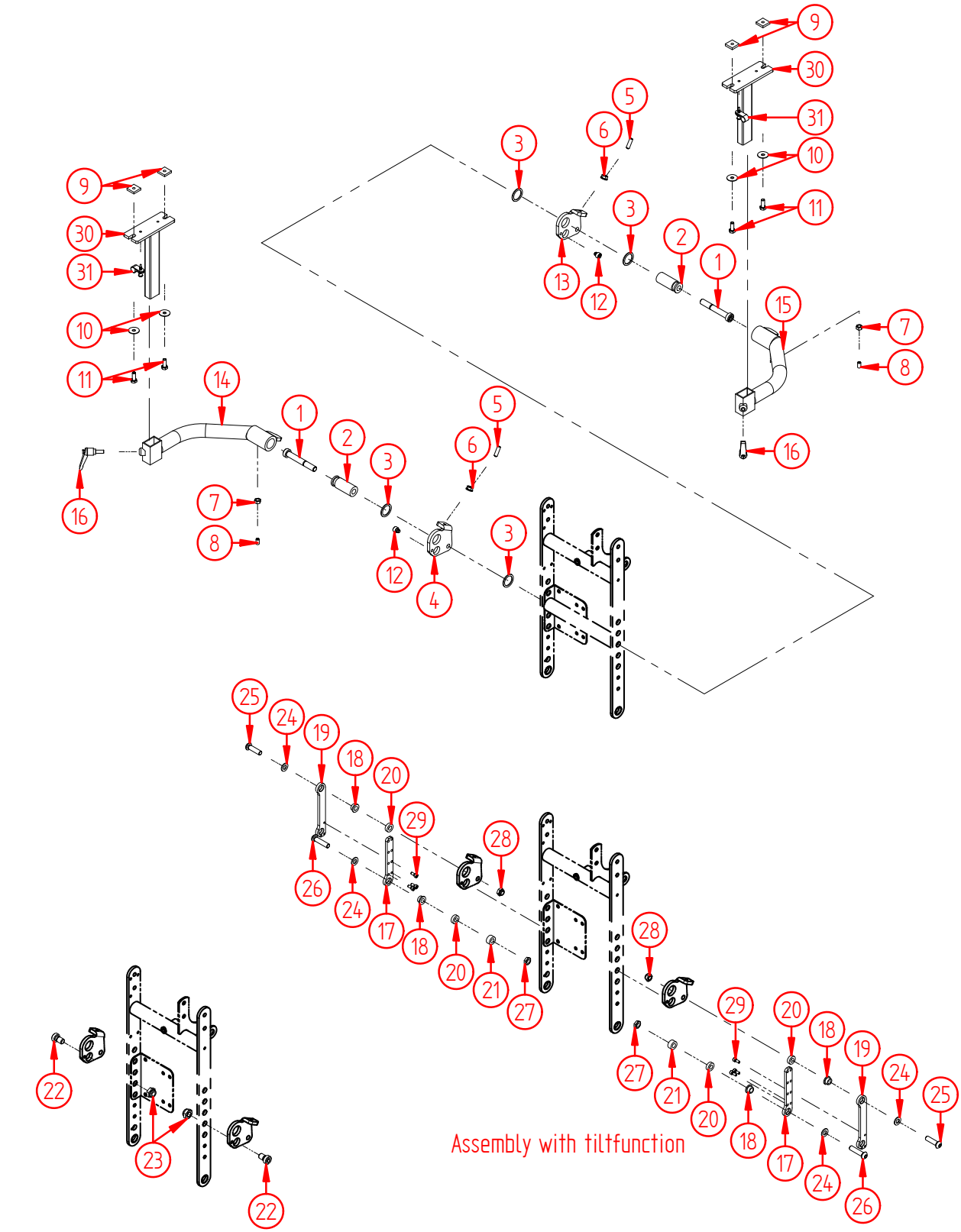

Product name:	**Armrest fastner, flip-up, height adj. Comfort 1-2 Balder F/L**
Product no:	**HP20071040**
Product reference:	**Balder F/L**
Manufacturer:	Etac AS, www.etac.com
Revision:	**14.10.10**

Pos no.	Part no.	Qty	Description
1	1218	2	Screw, hexagon socket head cap M10x70 DIN 6912 Elzink 8,8
2	1090	2	Shaft journal
3	1082	4	Washer, copper 20x26 DIN 7603
4	1093	1	Fixing plate, armrest, RH
5	1096	2	Screw, hexagon set, M6x20 DIN 916 Unplated
6	1039	2	Nut, tensilock M6 DIN 6923 Goldfinish 8,8
7	1089	2	Nut M6 DIN 934 Elzink
8	1088	2	Screw, hexagon set, M6x12 DIN 916 Unplated
9	1276	4	Nut 18x18x4xM6, square, steel
10	1338	4	Washer M6x20 DIN 522 Elzink
11	1084	4	Screw, hexagon M6x16 DIN 933 Elzink 8,8
12	4670	2	Screw, hexagon socket M6x6 DIN 912 Elzink 8,8
13	1092	1	Fixing plate, armrest, LH
14	10824	1	Armrest pipe, height adjable, RH, Comfort 1-2
15	10825	1	Armrest pipe, height adjable, LH, Comfort 1-2
16	12608	2	Locking handle, M6x16, AZS 42
17	11451	2	Bar, upper, par. function armrests
18	11450	4	Sleeve w/collar ø16/ø12/ø8,3 L:7,5mm
19	11452	2	Bar, lower, par. function armrests
20	11246	4	Sleeve, ø16/ø8,3 L:5mm
21	11449	2	Sleeve ø16/ø8,5 L:8mm
22	4922	2	Screw, hexagon socket M10x16 DIN 912 Elzink 8,8
23	1186	2	Nut, nylock M10 DIN 985 Elzink 8,8
24	1340	4	Washer M8 DIN 125 Elzink
25	1069	2	Screw, hexagon socket pan head M8x30 DIN 7380 Elzink 10,9
26	4468	2	Screw, hexagon socket pan head M8x35 DIN 7380 Elzink 8,8
27	1337	2	Nut M8, narrow DIN 439 Elzink
28	1070	2	Nut, nylock M8 DIN 985 El.zink 8,8
29	4054	6	Screw, hexagon socket M4x10 DIN 912 Elzink 8,8
30	13089	2	Bracket, h-adjustment armrest, Comf. 1-6, offset
31	13082	2	Cable clamp, black

Part no.	Qty	Description
.	.	Alternatives:
11941	1	Parts-kit, par.function armrest F/L/J, Left
480085	1	Parts-kit, par.function armrest F/L/J, Right
.	.	.

Product name:	**Armrest fastner, flip-up, height adj. Comfort 3-4 Balder F/L**
Product no:	**HP20071041**
Product reference:	**Balder F/L**
Manufacturer:	Etac AS, www.etac.com
Revision:	**14.10.10**

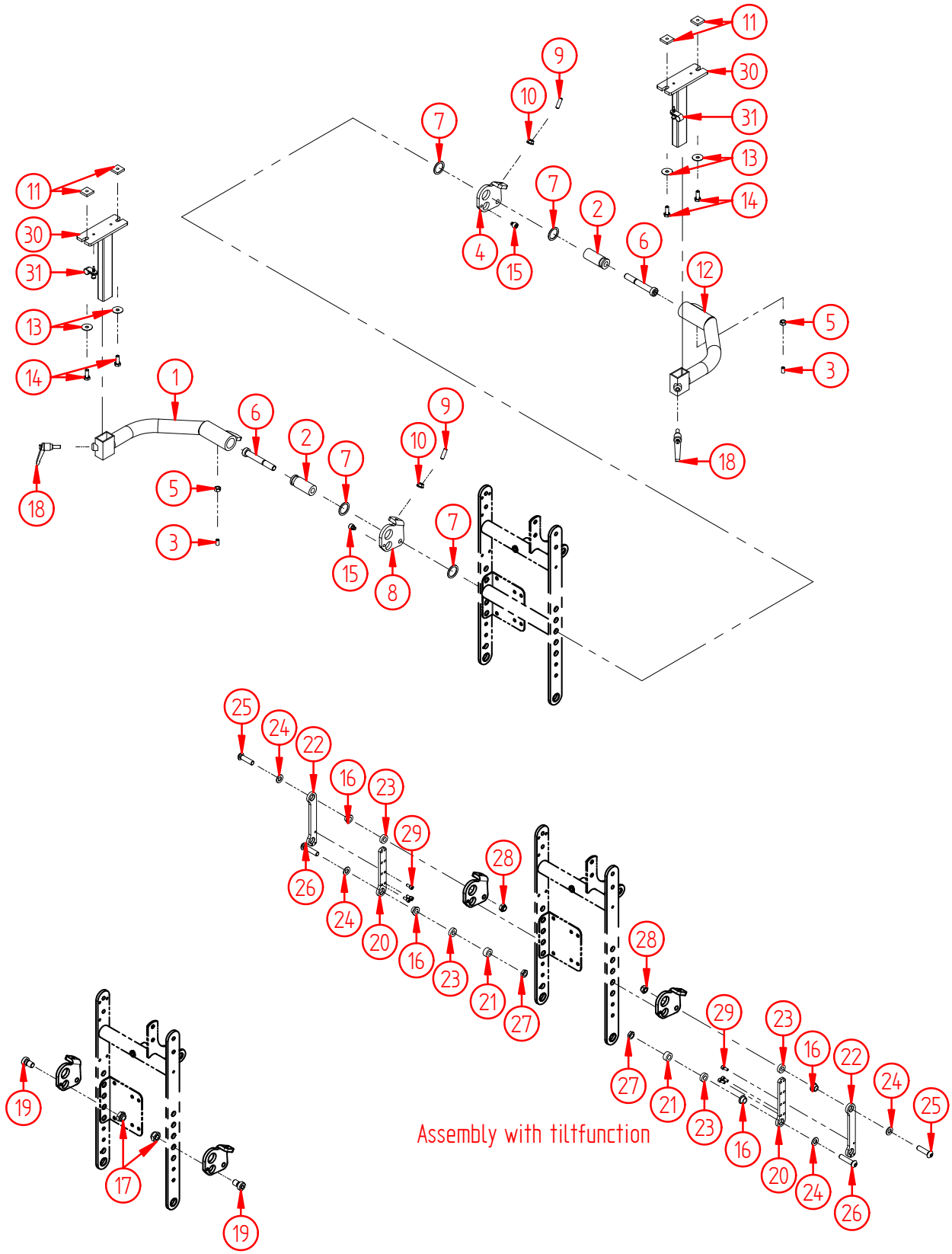

Product name:	**Armrest fastner, flip-up, height adj. Comfort 3-4 Balder F/L**
Product no:	**HP20071041**
Product reference:	**Balder F/L**
Manufacturer:	Etac AS, www.etac.com
Revision:	**14.10.10**

Pos no.	Part no.	Qty	Description
1	10826	1	Armrest pipe, height adjable, RH, Comfort 3-4
2	1090	2	Shaft journal
3	1088	2	Screw, hexagon set, M6x12 DIN 916 Unplated
4	1092	1	Fixing plate, armrest, LH
5	1089	2	Nut M6 DIN 934 Elzink
6	1218	2	Screw, hexagon socket head cap M10x70 DIN 6912 Elzink 8,8
7	1082	4	Washer, copper 20x26 DIN 7603
8	1093	1	Fixing plate, armrest, RH
9	1096	2	Screw, hexagon set, M6x20 DIN 916 Unplated
10	1039	2	Nut, tensilock M6 DIN 6923 Goldfinish 8,8
11	1276	4	Nut 18x18x4xM6, square, steel
12	10827	1	Armrest pipe, height adjable, LH, Comfort 3-4
13	1338	4	Washer M6x20 DIN 522 Elzink
14	1084	4	Screw, hexagon M6x16 DIN 933 Elzink 8,8
15	4670	2	Screw, hexagon socket M6x6 DIN 912 Elzink 8,8
16	11450	4	Sleeve w/collar ø16/ø12/ø8,3 L:7,5mm
17	1186	2	Nut, nylock M10 DIN 985 Elzink 8,8
18	12608	2	Locking handle, M6x16, AZS 42
19	4922	2	Screw, hexagon socket M10x16 DIN 912 Elzink 8,8
20	11451	2	Bar, upper, par. function armrests
21	11449	2	Sleeve ø16/ø8,5 L:8mm
22	11452	2	Bar, lower, par. function armrests
23	11246	4	Sleeve, ø16/ø8,3 L:5mm
24	1340	4	Washer M8 DIN 125 Elzink
25	1069	2	Screw, hexagon socket pan head M8x30 DIN 7380 Elzink 10,9
26	4468	2	Screw, hexagon socket pan head M8x35 DIN 7380 Elzink 8,8
27	1337	2	Nut M8, narrow DIN 439 Elzink
28	1070	2	Nut, nylock M8 DIN 985 El.zink 8,8
29	4054	6	Screw, hexagon socket M4x10 DIN 912 Elzink 8,8
30	13089	2	Bracket, h-adjustment armrest, Comf. 1-6, offset
31	13082	2	Cable clamp, black

Part no.	Qty	Description
.	.	Alternatives:
11941	1	Parts-kit, par.function armrest F/L/J, Left
480085	1	Parts-kit, par.function armrest F/L/J, Right
.	.	.

Product name:	**Armrest fastner, flip-up, height adj. Comfort 5-6 Balder F/L**
Product no:	**HP20071042**
Product reference:	**Balder F/L**
Manufacturer:	Etac AS, www.etac.com
Revision:	**14.10.10**

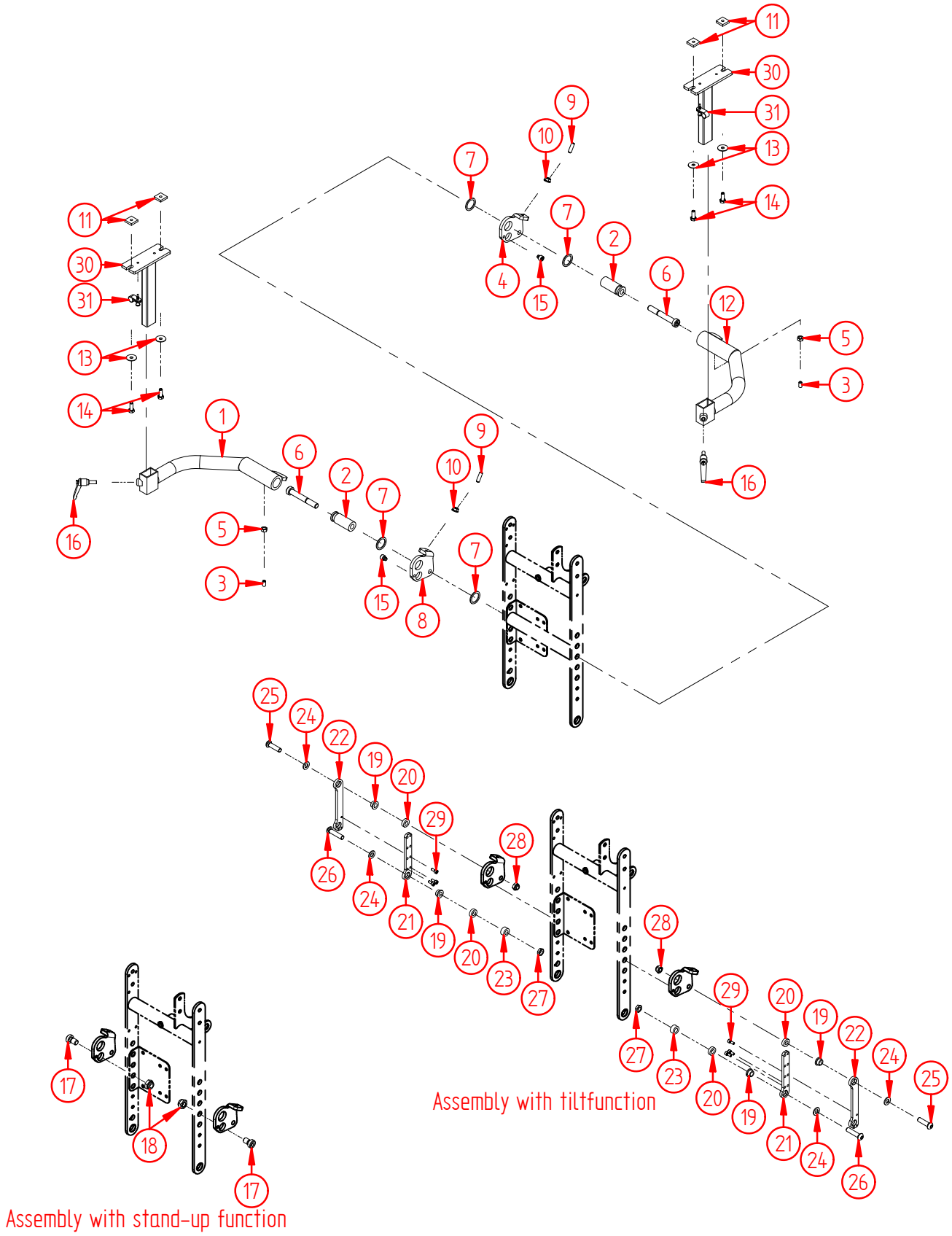

Product name:	**Armrest fastner, flip-up, height adj. Comfort 5-6 Balder F/L**
Product no:	**HP20071042**
Product reference:	**Balder F/L**
Manufacturer:	Etac AS, www.etac.com
Revision:	**14.10.10**

Pos no.	Part no.	Qty	Description
1	10828	1	Armrest pipe, height adjable, RH, Comfort 5-6
2	1090	2	Shaft journal
3	1088	2	Screw, hexagon set, M6x12 DIN 916 Unplated
4	1092	1	Fixing plate, armrest, LH
5	1089	2	Nut M6 DIN 934 Elzink
6	1218	2	Screw, hexagon socket head cap M10x70 DIN 6912 Elzink 8,8
7	1082	4	Washer, copper 20x26 DIN 7603
8	1093	1	Fixing plate, armrest, RH
9	1096	2	Screw, hexagon set, M6x20 DIN 916 Unplated
10	1039	2	Nut, tensilock M6 DIN 6923 Goldfinish 8,8
11	1276	4	Nut 18x18x4xM6, square, steel
12	10829	1	Armrest pipe, height adjable, LH, Comfort 5-6
13	1338	4	Washer M6x20 DIN 522 Elzink
14	1084	4	Screw, hexagon M6x16 DIN 933 Elzink 8,8
15	4670	2	Screw, hexagon socket M6x6 DIN 912 Elzink 8,8
16	12608	2	Locking handle, M6x16, AZS 42
17	4922	2	Screw, hexagon socket M10x16 DIN 912 Elzink 8,8
18	1186	2	Nut, nylock M10 DIN 985 Elzink 8,8
19	11450	4	Sleeve w/collar ø16/ø12/ø8,3 L:7,5mm
20	11246	4	Sleeve, ø16/ø8,3 L:5mm
21	11451	2	Bar, upper, par. function armrests
22	11452	2	Bar, lower, par. function armrests
23	11449	2	Sleeve ø16/ø8,5 L:8mm
24	1340	4	Washer M8 DIN 125 Elzink
25	1069	2	Screw, hexagon socket pan head M8x30 DIN 7380 Elzink 10,9
26	4468	2	Screw, hexagon socket pan head M8x35 DIN 7380 Elzink 8,8
27	1337	2	Nut M8, narrow DIN 439 Elzink
28	1070	2	Nut, nylock M8 DIN 985 El.zink 8,8
29	4054	6	Screw, hexagon socket M4x10 DIN 912 Elzink 8,8
30	13089	2	Bracket, h-adjustment armrest, Comf. 1-6, offset
31	13082	2	Cable clamp, black

Part no.	Qty	Description
.	.	Alternatives:
11941	1	Parts-kit, par.function armrest F/L/J, Left
480085	1	Parts-kit, par.function armrest F/L/J, Right
.	.	.

Product name:	**Armrest fastner, flip-up Balder J240**
Product no:	**HP20071043**
Product reference:	**Balder J240**
Manufacturer:	Etac AS, www.etac.com
Revision:	**01.01.07**

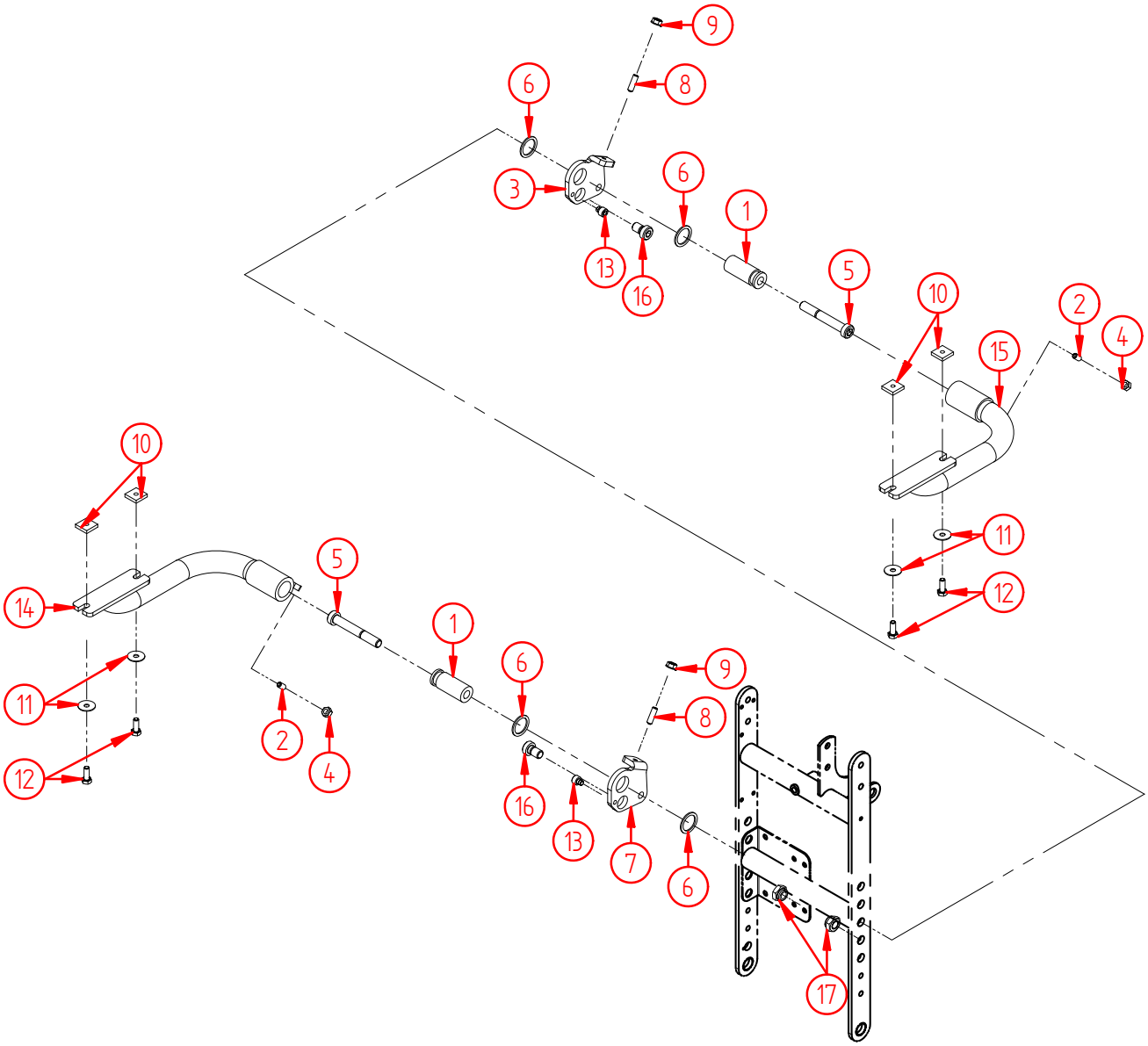

Product name:	**Armrest fastner, flip-up Balder J240**
Product no:	**HP20071043**
Product reference:	**Balder J240**
Manufacturer:	Etac AS, www.etac.com
Revision:	**01.01.07**

Pos no.	Part no.	Qty	Description
1	1090	2	Shaft journal
2	1088	2	Screw, hexagon set, M6x12 DIN 916 Unplated
3	1092	1	Fixing plate, armrest, LH
4	1089	2	Nut M6 DIN 934 Elzink
5	1218	2	Screw, hexagon socket head cap M10x70 DIN 6912 Elzink 8,8
6	1082	4	Washer, copper 20x26 DIN 7603
7	1093	1	Fixing plate, armrest, RH
8	1096	2	Screw, hexagon set, M6x20 DIN 916 Unplated
9	1039	2	Nut, tensilock M6 DIN 6923 Goldfinish 8,8
10	1276	4	Nut 18x18x4xM6, square, steel
11	1338	4	Washer M6x20 DIN 522 Elzink
12	1084	4	Screw, hexagon M6x16 DIN 933 Elzink 8,8
13	4670	2	Screw, hexagon socket M6x6 DIN 912 Elzink 8,8
14	10181	1	Armrest pipe, RH, Junior 240
15	10182	1	Armrest pipe, LH, Junior 240
16	4922	2	Screw, hexagon socket M10x16 DIN 912 Elzink 8,8
17	1186	2	Nut, nylock M10 DIN 985 Elzink 8,8

Part no.	Qty	Description
.	.	.
.	.	.
.	.	.
.	.	.

Product name:	**Armrest fastner, flip-up, height adj. Balder J240**
Product no:	**HP20071044**
Product reference:	**Balder J240**
Manufacturer:	Etac AS, www.etac.com
Revision:	**27.08.09**

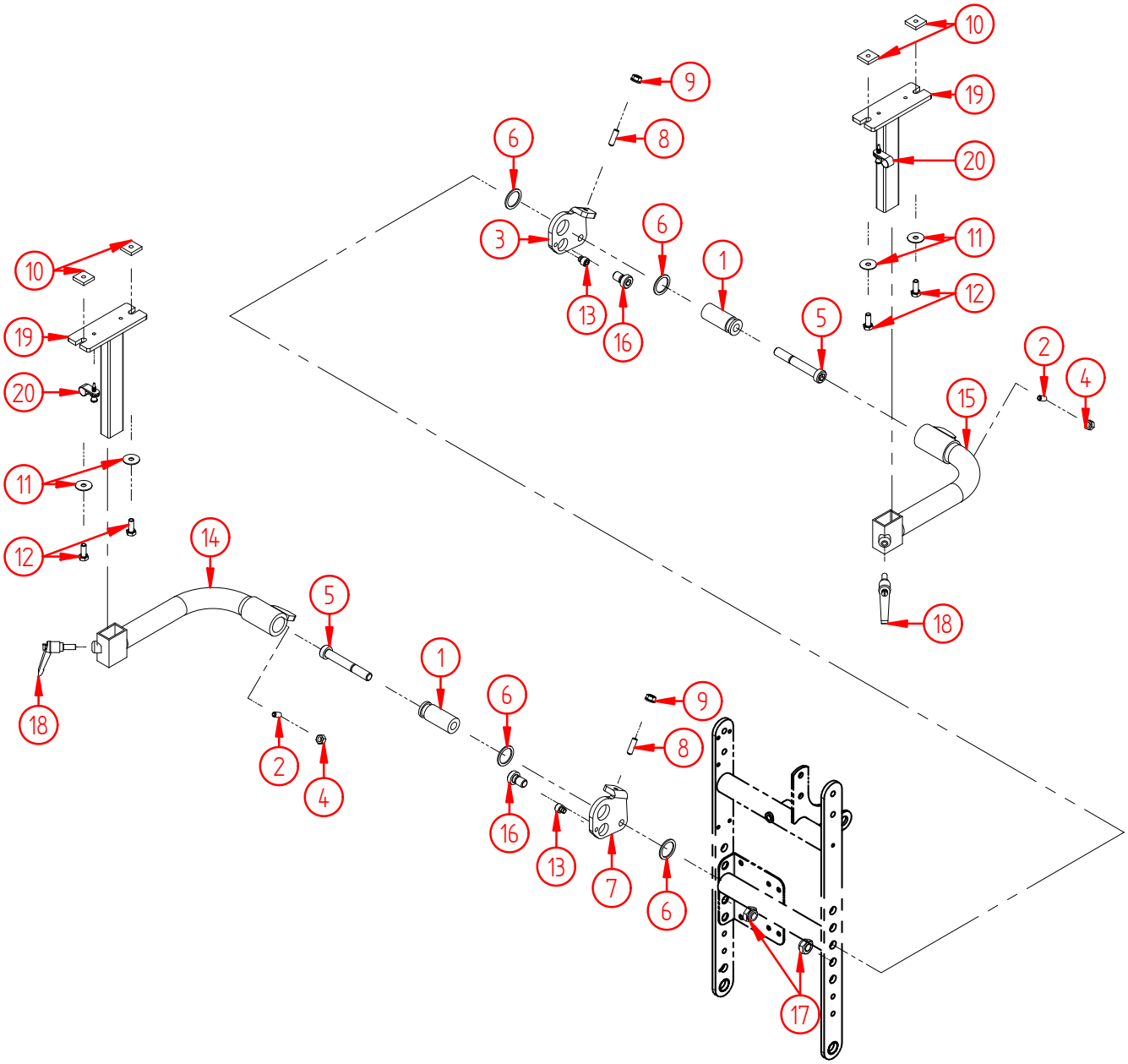

Product name:	**Armrest fastner, flip-up, height adj. Balder J240**
Product no:	**HP20071044**
Product reference:	**Balder J240**
Manufacturer:	Etac AS, www.etac.com
Revision:	**27.08.09**

Pos no.	Part no.	Qty	Description
1	1090	2	Shaft journal
2	1088	2	Screw, hexagon set, M6x12 DIN 916 Unplated
3	1092	1	Fixing plate, armrest, LH
4	1089	2	Nut M6 DIN 934 Elzink
5	1218	2	Screw, hexagon socket head cap M10x70 DIN 6912 Elzink 8,8
6	1082	4	Washer, copper 20x26 DIN 7603
7	1093	1	Fixing plate, armrest, RH
8	1096	2	Screw, hexagon set, M6x20 DIN 916 Unplated
9	1039	2	Nut, tensilock M6 DIN 6923 Goldfinish 8,8
10	1276	4	Nut 18x18x4xM6, square, steel
11	1338	4	Washer M6x20 DIN 522 Elzink
12	1084	4	Screw, hexagon M6x16 DIN 933 Elzink 8,8
13	4670	2	Screw, hexagon socket M6x6 DIN 912 Elzink 8,8
14	11341	1	Armrest pipe, height adjustable, RH, J240
15	11342	1	Armrest pipe, height adjustable, LH, J240
16	4922	2	Screw, hexagon socket M10x16 DIN 912 Elzink 8,8
17	1186	2	Nut, nylock M10 DIN 985 Elzink 8,8
18	12608	2	Locking handle, M6x16, AZS 42
19	13089	2	Bracket, h-adjustment armrest, Comf. 1-6, offset
20	13082	2	Cable clamp, black

Part no.	Qty	Description
.	.	.
.	.	.
.	.	.
.	.	.

Product name:	**Armrest fastner, height adjustable Balder J**
Product no:	**HP20071045**
Product reference:	**Balder J**
Manufacturer:	Etac AS, www.etac.com
Revision:	**01.01.07**

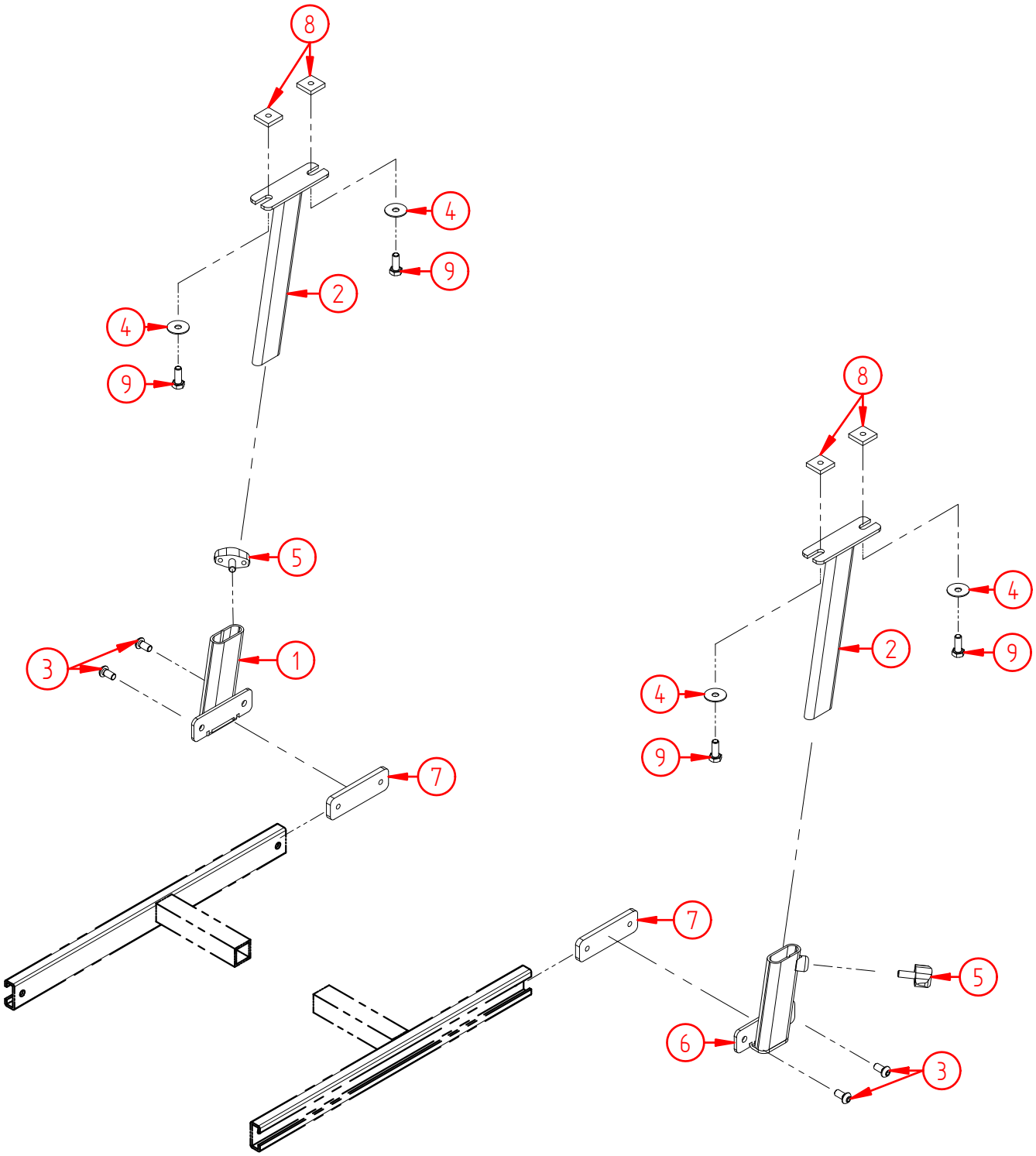

Product name:	**Armrest fastner, height adjustable Balder J**
Product no:	**HP20071045**
Product reference:	**Balder J**
Manufacturer:	Etac AS, www.etac.com
Revision:	**01.01.07**

Pos no.	Part no.	Qty	Description
1	10087	1	Bracket, h-adjustment armrest, RH, J230/235
2	10090	2	Bracket, armrestpad Junior 230/235
3	1312	4	Screw, hexagon socket pan head M6x12 ISO7380 Elzink 10,9
4	1338	4	Washer M6x20 DIN 522 Elzink
5	000532	2	Locking lever M6x15
6	10088	1	Bracket, h-adjustment armrest, LH, J230/235
7	10089	2	Glidiplate, fixingplate, Junior 230/235
8	1276	4	Nut 18x18x4xM6, square, steel
9	1084	4	Screw, hexagon M6x16 DIN 933 Elzink 8,8

Part no.	Qty	Description
.	.	.
.	.	.
.	.	.
.	.	.

Product name:	**Armrest fastner, flip-up, Recaro, Balder F/L**
Product no:	**HP20071046**
Product reference:	**Balder F/L**
Manufacturer:	Etac AS, www.etac.com
Revision:	**14.10.10**

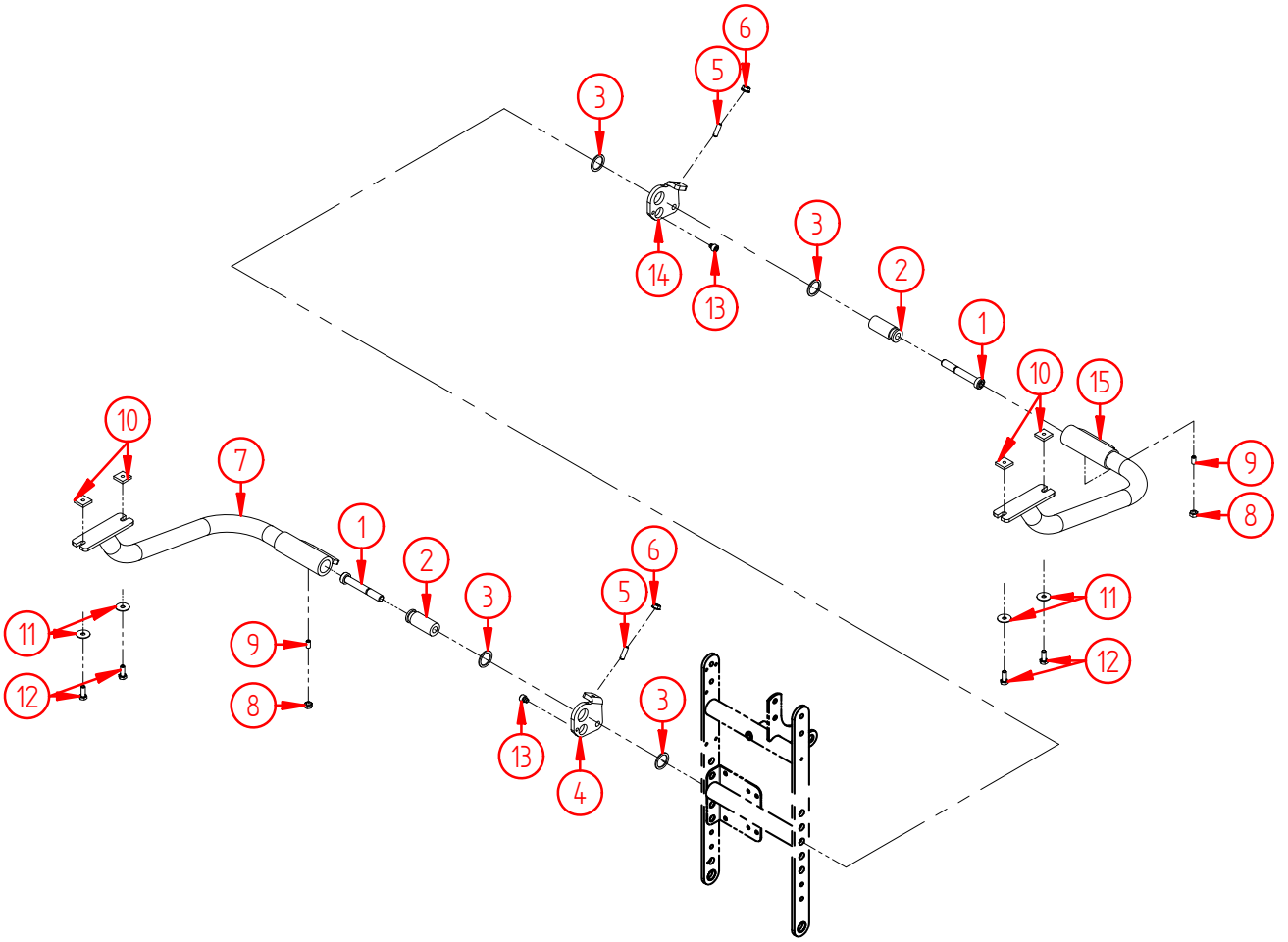

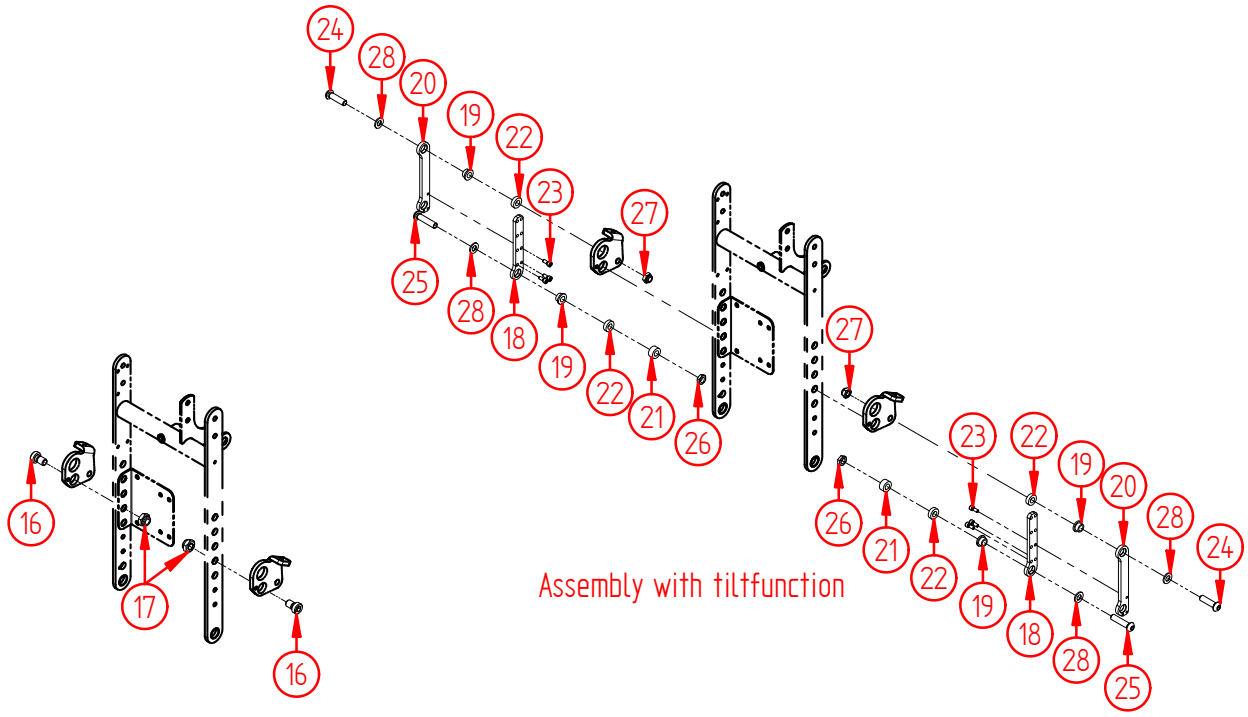

Assembly with stand-up function

Product name:	**Armrest fastner, flip-up, Recaro, Balder F/L**
Product no:	**HP20071046**
Product reference:	**Balder F/L**
Manufacturer:	Etac AS, www.etac.com
Revision:	**14.10.10**

Pos no.	Part no.	Qty	Description
1	1218	2	Screw, hexagon socket head cap M10x70 DIN 6912 Elzink 8,8
2	1090	2	Shaft journal
3	1082	4	Washer, copper 20x26 DIN 7603
4	1093	1	Fixing plate, armrest, RH
5	1096	2	Screw, hexagon set, M6x20 DIN 916 Unplated
6	1039	2	Nut, tensilock M6 DIN 6923 Goldfinish 8,8
7	4010	1	Armrest pipe, universal, ext, RH
8	1089	2	Nut M6 DIN 934 Elzink
9	1088	2	Screw, hexagon set, M6x12 DIN 916 Unplated
10	1276	4	Nut 18x18x4xM6, square, steel
11	1338	4	Washer M6x20 DIN 522 Elzink
12	1084	4	Screw, hexagon M6x16 DIN 933 Elzink 8,8
13	4670	2	Screw, hexagon socket M6x6 DIN 912 Elzink 8,8
14	1092	1	Fixing plate, armrest, LH
15	4009	1	Armrest pipe, universal, ext, LH
16	4922	2	Screw, hexagon socket M10x16 DIN 912 Elzink 8,8
17	1186	2	Nut, nylock M10 DIN 985 Elzink 8,8
18	11451	2	Bar, upper, par. function armrests
19	11450	4	Sleeve w/collar ø16/ø12/ø8,3 L:7,5mm
20	11452	2	Bar, lower, par. function armrests
21	11449	2	Sleeve ø16/ø8,5 L:8mm
22	11246	4	Sleeve, ø16/ø8,3 L:5mm
23	4054	6	Screw, hexagon socket M4x10 DIN 912 Elzink 8,8
24	1069	2	Screw, hexagon socket pan head M8x30 DIN 7380 Elzink 10,9
25	4468	2	Screw, hexagon socket pan head M8x35 DIN 7380 Elzink 8,8
26	1337	2	Nut M8, narrow DIN 439 Elzink
27	1070	2	Nut, nylock M8 DIN 985 El.zink 8,8
28	1340	4	Washer M8 DIN 125 Elzink

Part no.	Qty	Description
.	.	Alternatives:
11941	1	Parts-kit, par.function armrest F/L/J, Left
480085	1	Parts-kit, par.function armrest F/L/J, Right
.	.	.

Product name:	**Armrest fastner, flip-up, height adj. Recaro, Balder F/L**
Product no:	**HP20071047**
Product reference:	**Balder F/L**
Manufacturer:	Etac AS, www.etac.com
Revision:	**14.10.10**

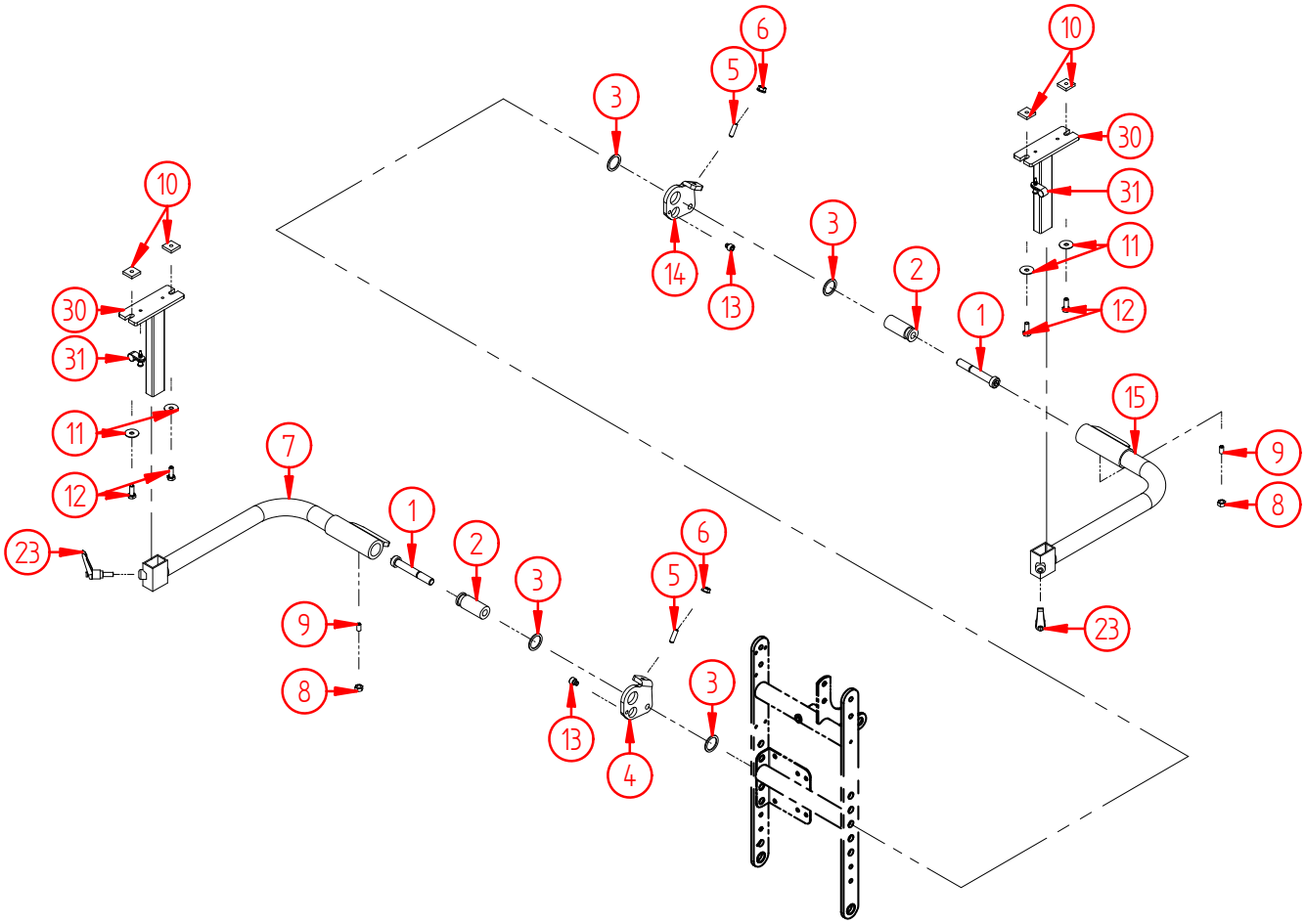

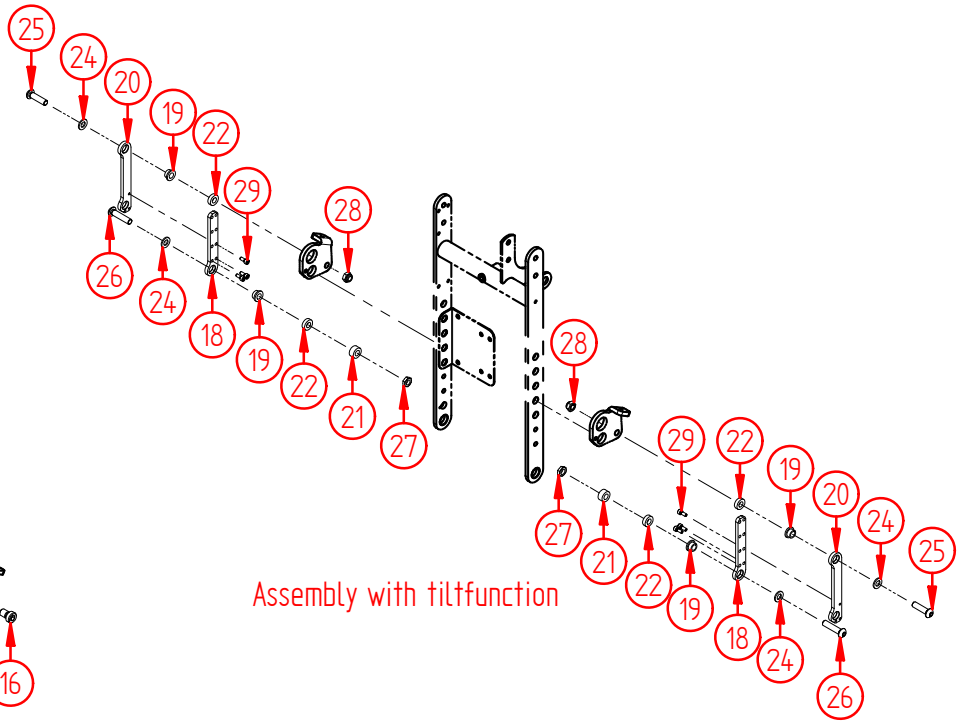

Assembly with tiltfunction

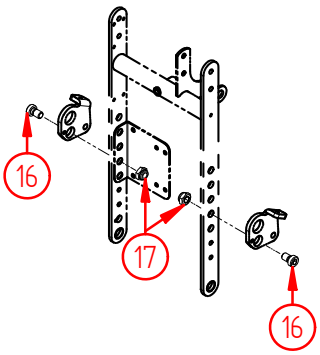

Assembly with stand-up function

Product name:	**Armrest fastner, flip-up, height adj. Recaro, Balder F/L**
Product no:	**HP20071047**
Product reference:	**Balder F/L**
Manufacturer:	Etac AS, www.etac.com
Revision:	**14.10.10**

Pos no.	Part no.	Qty	Description
1	1218	2	Screw, hexagon socket head cap M10x70 DIN 6912 Elzink 8,8
2	1090	2	Shaft journal
3	1082	4	Washer, copper 20x26 DIN 7603
4	1093	1	Fixing plate, armrest, RH
5	1096	2	Screw, hexagon set, M6x20 DIN 916 Unplated
6	1039	2	Nut, tensilock M6 DIN 6923 Goldfinish 8,8
7	11343	1	Armrest pipe, height adjustable, RH, universal
8	1089	2	Nut M6 DIN 934 Elzink
9	1088	2	Screw, hexagon set, M6x12 DIN 916 Unplated
10	1276	4	Nut 18x18x4xM6, square, steel
11	1338	4	Washer M6x20 DIN 522 Elzink
12	1084	4	Screw, hexagon M6x16 DIN 933 Elzink 8,8
13	4670	2	Screw, hexagon socket M6x6 DIN 912 Elzink 8,8
14	1092	1	Fixing plate, armrest, LH
15	11344	1	Armrest pipe, height adjustable, LH, universal
16	4922	2	Screw, hexagon socket M10x16 DIN 912 Elzink 8,8
17	1186	2	Nut, nylock M10 DIN 985 Elzink 8,8
18	11451	2	Bar, upper, par. function armrests
19	11450	4	Sleeve w/collar ø16/ø12/ø8,3 L:7,5mm
20	11452	2	Bar, lower, par. function armrests
21	11449	2	Sleeve ø16/ø8,5 L:8mm
22	11246	4	Sleeve, ø16/ø8,3 L:5mm
23	12608	2	Locking handle, M6x16, AZS 42
24	1340	4	Washer M8 DIN 125 Elzink
25	1069	2	Screw, hexagon socket pan head M8x30 DIN 7380 Elzink 10,9
26	4468	2	Screw, hexagon socket pan head M8x35 DIN 7380 Elzink 8,8
27	1337	2	Nut M8, narrow DIN 439 Elzink
28	1070	2	Nut, nylock M8 DIN 985 El.zink 8,8
29	4054	6	Screw, hexagon socket M4x10 DIN 912 Elzink 8,8
30	13089	2	Bracket, h-adjustment armrest, Comf. 1-6, offset
31	13082	2	Cable clamp, black

Part no.	Qty	Description
.	.	Alternatives:
11941	1	Parts-kit, par.function armrest F/L/J, Left
480085	1	Parts-kit, par.function armrest F/L/J, Right
.	.	.

Product name:	**Armrest fastner, Recaro LX, Recaro back - RH**
Product no:	**HP20071267**
Product reference:	**Balder Recaro**
Manufacturer:	Etac AS, www.etac.com
Revision:	**01.01.07**

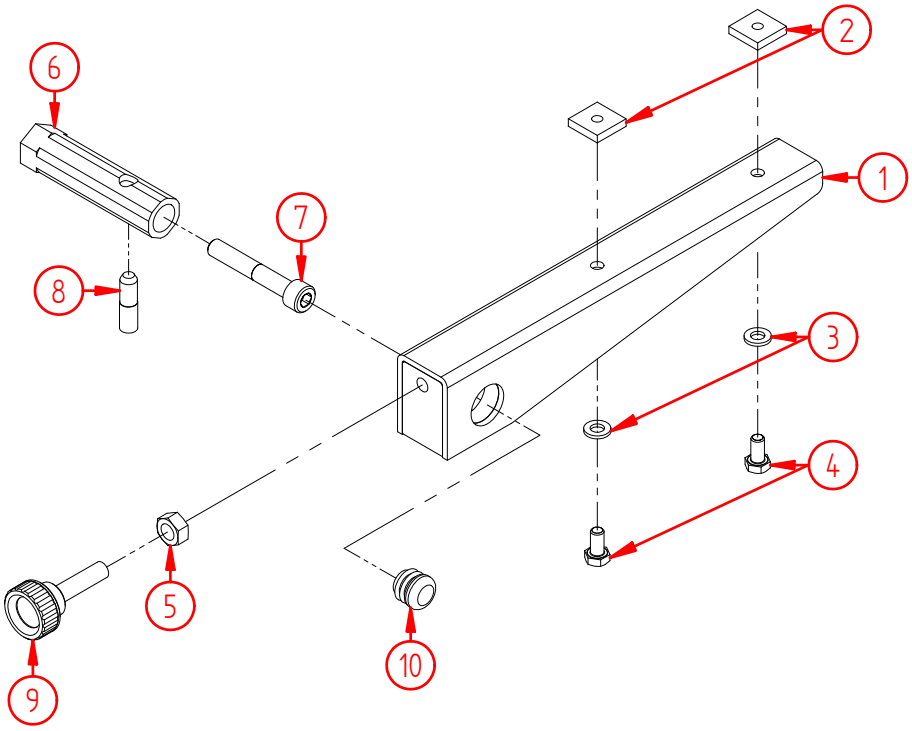

Product name:	**Armlene, innfest., Recaro LX, i rygg, Oppvipp, V**
Product no:	**HP20071268**
Product reference:	**Balder Recaro**
Manufacturer:	Etac AS, www.etac.com
Revision:	**01.01.07**

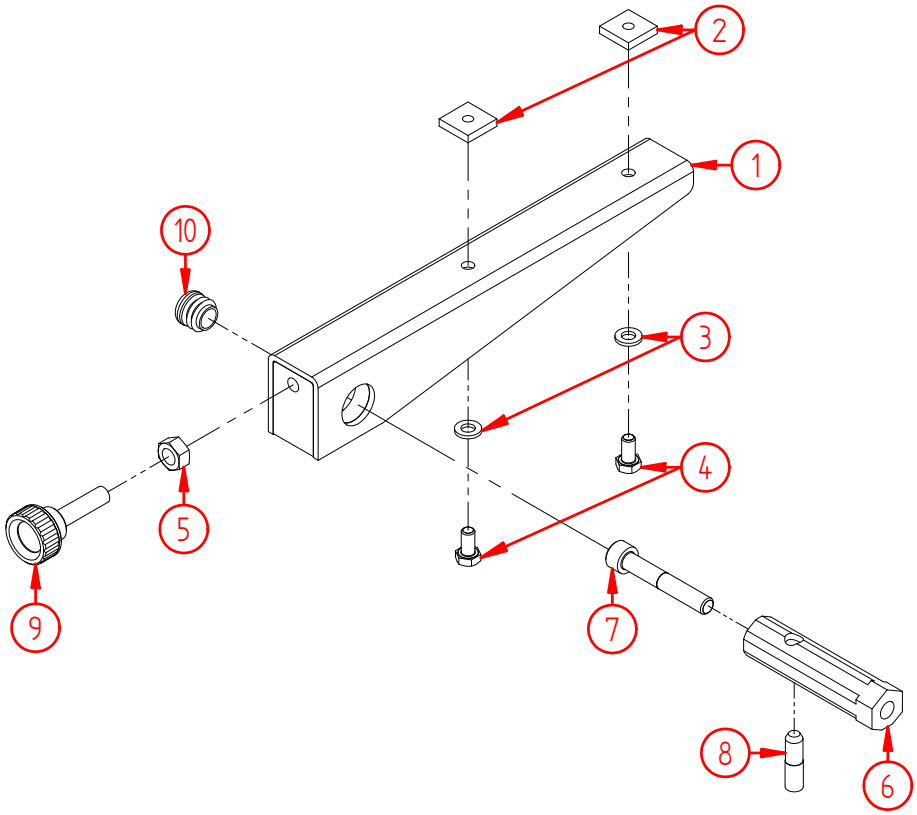

Product name:	**Armrest fastner, Recaro LX, Recaro back - RH**
Product no:	**HP20071267**
Product reference:	**Balder Recaro**
Manufacturer:	Etac AS, www.etac.com
Revision:	**01.01.07**

Pos no.	Part no.	Qty	Description
1	8627	1	Bracket for armrest fitted to Recaro back F/L
2	1276	2	Nut 18x18x4xM6, square, steel
3	1311	2	Washer M6 DIN 125 Elzink
4	1210	2	Screw, hexagon M6x12 DIN 933 Elzink 8,8
5	1100	1	Nut M8 DIN 934 Elzink
6	000473	1	Fixing Bolt for Flip Up Arm
7	10282	1	Screw, hexagon socket M8x50 DIN 912 Elzink 8,8
8	000333	1	Stop Screw for Armrest
9	000322	1	Fixation screw, WN67 M8x30
10	8658	1	Ribbed Plastic Insert Ø16

Product name:	**Armlene, innfest., Recaro LX, i rygg, Oppvipp, V**
Product no:	**HP20071268**
Product reference:	**Balder Recaro**
Manufacturer:	Etac AS, www.etac.com
Revision:	**01.01.07**

Pos no.	Part no.	Qty	Description
1	8627	1	Bracket for armrest fitted to Recaro back F/L
2	1276	2	Nut 18x18x4xM6, square, steel
3	1311	2	Washer M6 DIN 125 Elzink
4	1210	2	Screw, hexagon M6x12 DIN 933 Elzink 8,8
5	1100	1	Nut M8 DIN 934 Elzink
6	000473	1	Fixing Bolt for Flip Up Arm
7	10282	1	Screw, hexagon socket M8x50 DIN 912 Elzink 8,8
8	000333	1	Stop Screw for Armrest
9	000322	1	Fixation screw, WN67 M8x30
10	8658	1	Ribbed Plastic Insert Ø16

08. Footrest

Product name:	**Legrest, base unit, manual, Balder F/L**
Product no:	**HP20071048**
Product reference:	**Balder F/L**
Manufacturer:	Etac AS, www.etac.com
Revision:	**22.04.08**

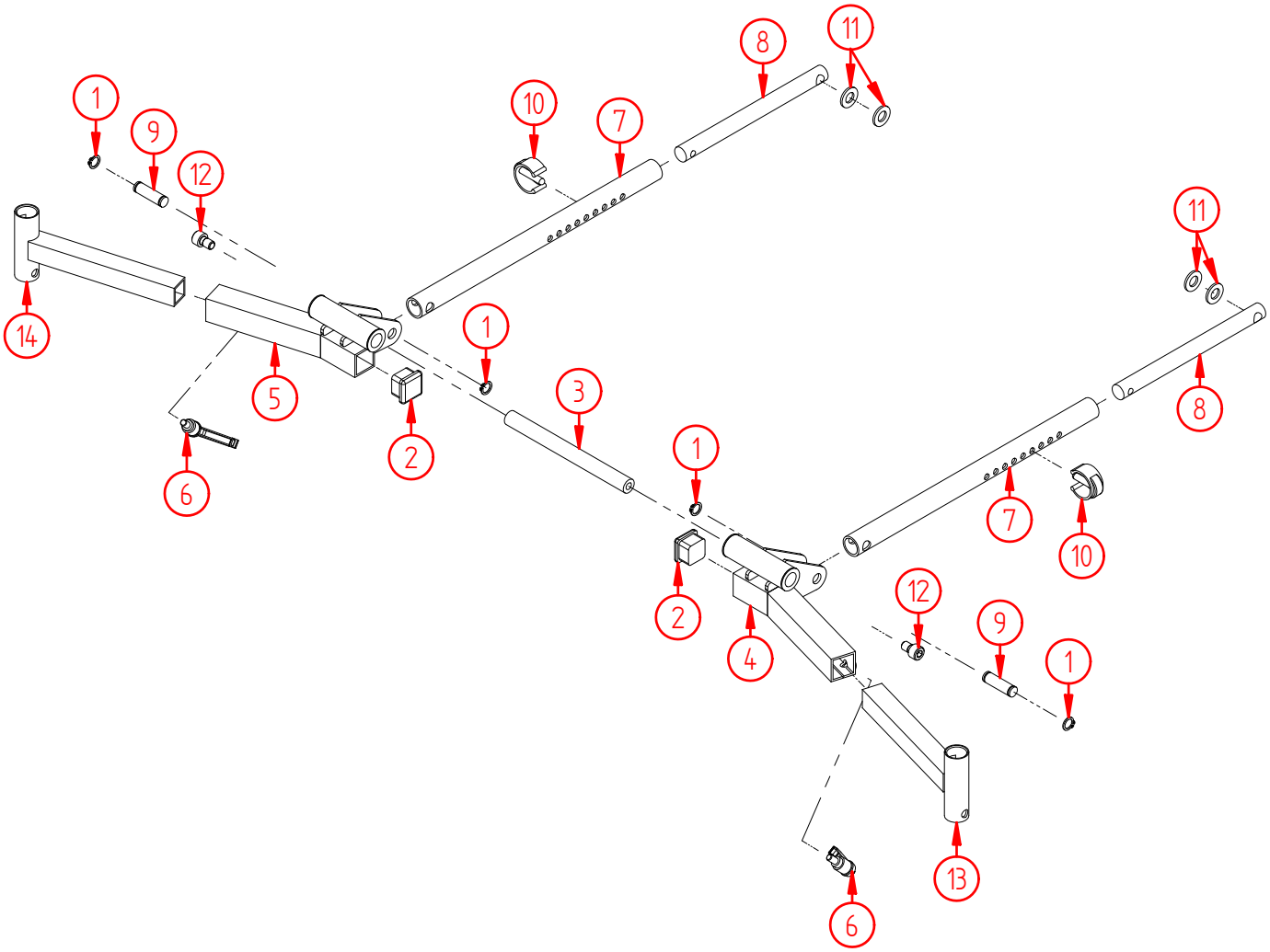

Product name:	**Legrest, base unit, manual, Balder F/L**
Product no:	**HP20071048**
Product reference:	**Balder F/L**
Manufacturer:	Etac AS, www.etac.com
Revision:	**22.04.08**

Pos no.	Part no.	Qty	Description
1	1153	4	Circlip Ø10, outside DIN 471 Unplated
2	2057	2	Ribbed Plastic Insert
3	1148	1	Main shaft-suspension, legrest F/L/J
4	5041	1	Bracket, inner for man. divided footrest LH,F/L
5	5042	1	Bracket inner for man. divided footrest RH, F/L
6	000294	2	Locking handle, M6x16, APS
7	5045	2	Tube for angle adjust. man div. footrest F/L
8	5040	2	Bar, angle adjusting man. divided footrest F/L
9	4280	2	Short axle for footrest actuator w/el.length comp
10	5059	2	Clip for crutches
11	2981	4	Washer M10 DIN 125 Elzink
12	10751	2	Screw, hexagon socket M8x12 DIN 912 Elzink 8,8
13	11736	1	Bracket, outer for manual CROSS footrest LH, L/F
14	11735	1	Bracket, outer for manual CROSS footrest RH, L/F

Part no.	Qty	Description
.	.	.
.	.	.
.	.	.
.	.	.

Product name:	**Legrest, base unit, manual, Balder J**
Product no:	**HP20071049**
Product reference:	**Balder J**
Manufacturer:	Etac AS, www.etac.com
Revision:	**01.01.07**

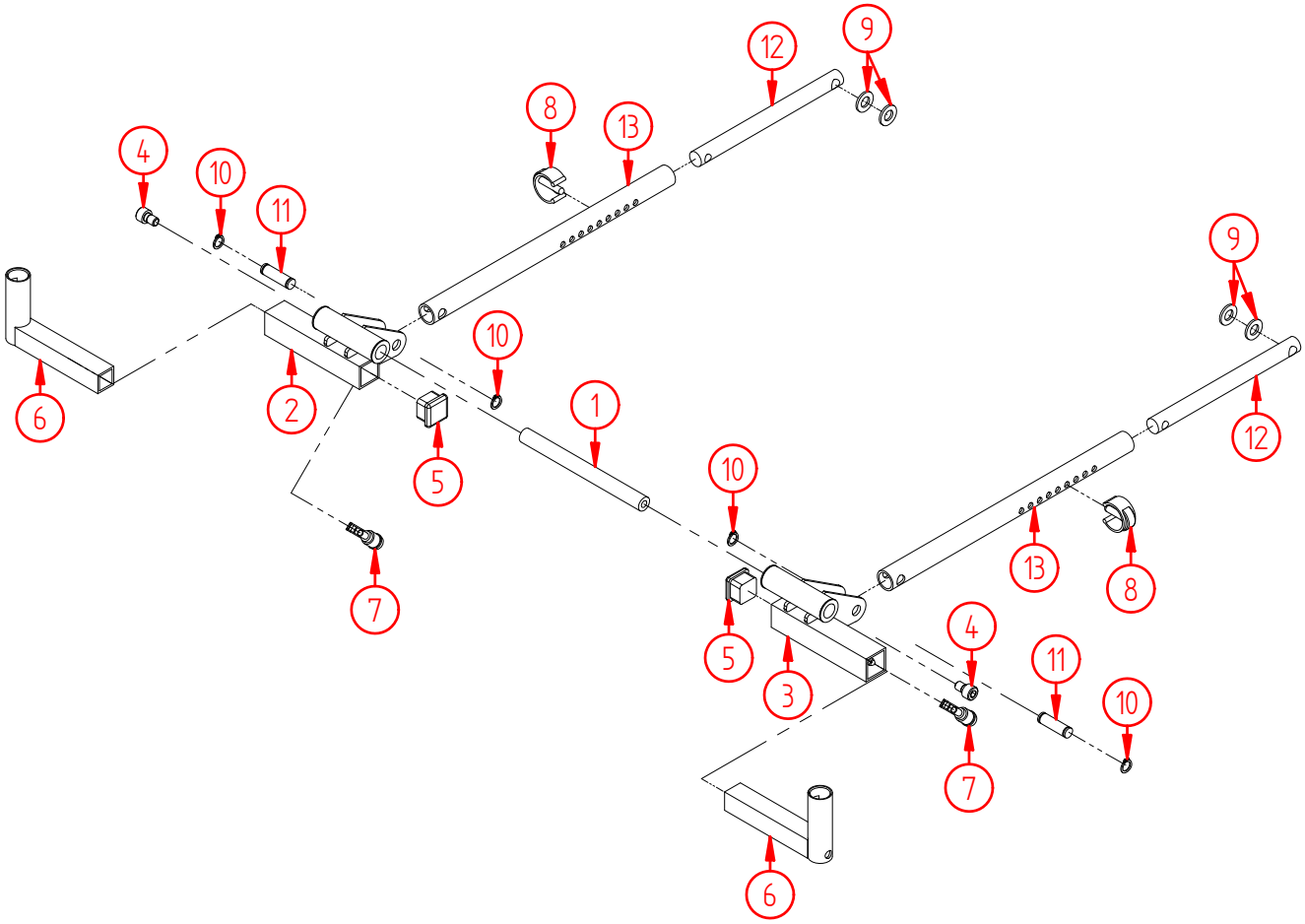

Product name:	**Legrest, base unit, manual, Balder J**
Product no:	**HP20071049**
Product reference:	**Balder J**
Manufacturer:	Etac AS, www.etac.com
Revision:	**01.01.07**

Pos no.	Part no.	Qty	Description
1	1148	1	Main shaft-suspension, legrest F/L/J
2	10137	1	Bracket,inner for man. divided footrest RH, Junior
3	10138	1	Bracket, inner for man. divided footrest LH, Junior
4	10751	2	Screw, hexagon socket M8x12 DIN 912 Elzink 8,8
5	2057	2	Ribbed Plastic Insert
6	11737	2	Bracket, outer for manual CROSS footrest L/RH, J
7	000294	2	Locking handle, M6x16, APS
8	5059	2	Clip for crutches
9	2981	4	Washer M10 DIN 125 Elzink
10	1153	4	Circlip Ø10, outside DIN 471 Unplated
11	4280	2	Short axle for footrest actuator w/el.length comp
12	5040	2	Bar, angle adjusting man. divided footrest F/L
13	5045	2	Tube for angle adjust. man div. footrest F/L

Part no.	Qty	Description
.	.	.
.	.	.
.	.	.
.	.	.

Product name:	**Legrest, base unit, aut. lengthcomp**
Product no:	**HP20071050**
Product reference:	**Balder F/L**
Manufacturer:	Etac AS, www.etac.com
Revision:	**26.05.09**

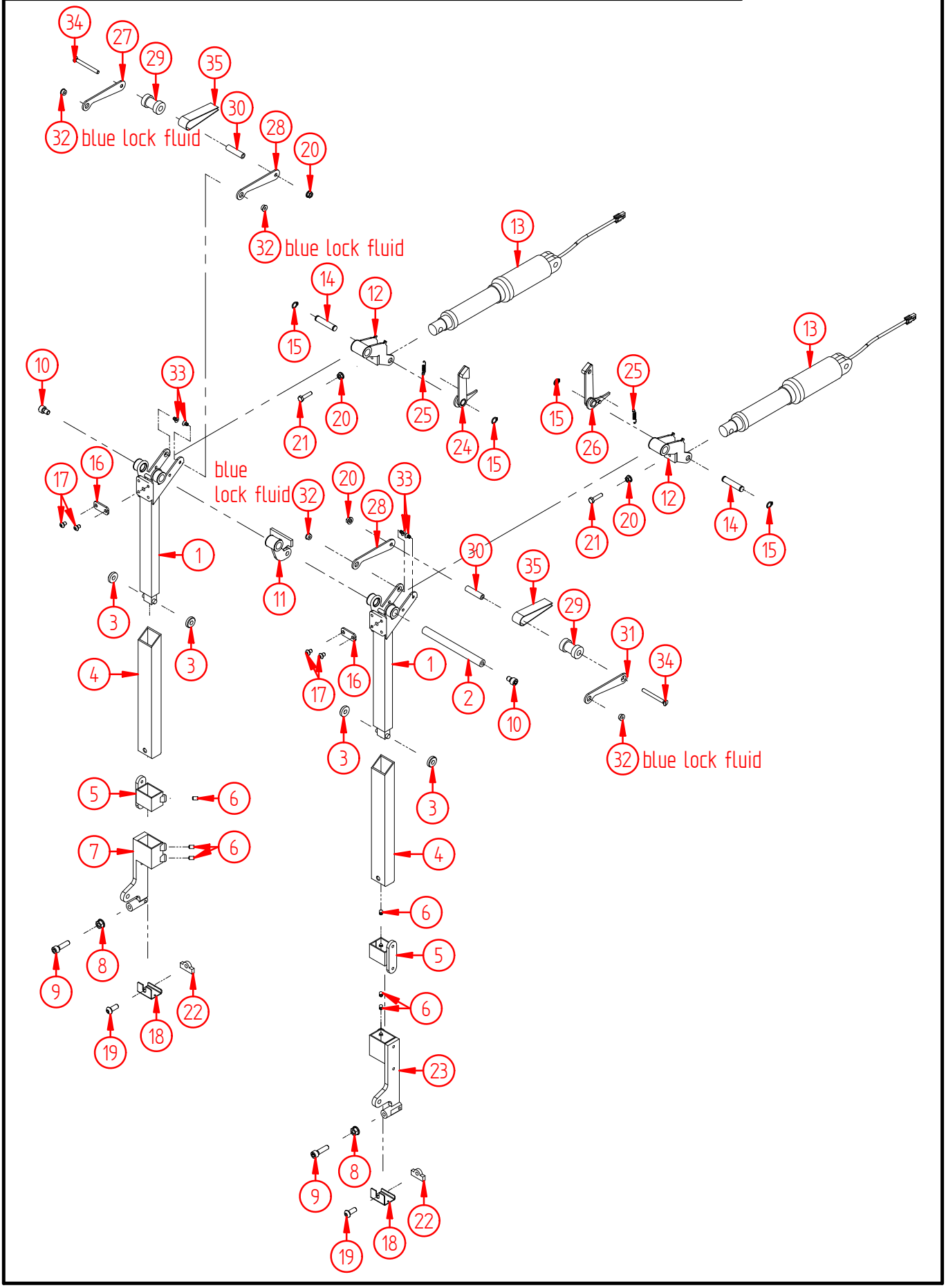

Product name:	**Legrest, base unit, aut. lengthcomp**
Product no:	**HP20071050**
Product reference:	**Balder F/L**
Manufacturer:	Etac AS, www.etac.com
Revision:	**26.05.09**

Pos no.	Part no.	Qty	Description
1	1132	2	Arm, footrest, 150mm /el. senter footrest
2	1148	1	Main shaft-suspension, legrest F/L/J
3	1158	4	Telescope wheel, length comp., legrest
4	1123	2	Telescope tube, footrest 150/200, outside
5	3729	2	Bracket calf pad/telscope
6	2340	6	Screw, hexagon set, M6x10 DIN 916 Unplated
7	3731	1	Bracket for footplate RH
8	1126	2	Nut, tensilock M8 DIN 6923 Goldfinish 8,8
9	4896	2	Screw, hexagon socket M8x30 DIN 912 Elzink 8,8
10	10751	2	Screw, hexagon socket M8x12 DIN 912 Elzink 8,8
11	1144	1	Footrest link
12	1150	2	Link, actuator, legrest w/lengthcomp.
13	1151	2	Actuator, legrest tilt F/L/J
14	1154	2	Axle, fore actuatorfixing, center divided legrest
15	1153	4	Circlip Ø10, outside DIN 471 Unplated
16	1134	2	Straplock, center divided legrest
17	1212	4	Screw, hexagon socket pan head M6x8 ISO7380 Elzink 10,9
18	1101	2	End plate, telescope, center divided legrest
19	1008	2	Screw, hexagon socket pan head M8x20 DIN 7380 Elzink 8,8
20	1039	4	Nut, tensilock M6 DIN 6923 Goldfinish 8,8
21	000359	2	Screw, hexagon headed M6x25 DIN 933 Elzink 8,8
22	1196	2	Nut, strap, lengthcomp. legrest
23	3732	1	Bracket for footplate LH
24	1155	1	Releaser, center divided legrest, RH
25	3745	2	Spring, stretch, release center divided legrest
26	3726	1	Releaser, center divided legrest, LH
27	4913	1	Strap bracket with countersunk screw holes, left
28	1139	2	Strap bracket
29	1140	2	Strap wheel, center divided legrest
30	1141	2	Sleeve for strap wheel, center divided legrest
31	4429	1	Strap bracket with countersunk screw holes, right
32	1138	4	Nut sleeve, center divided legrest
33	1137	4	Screw, hexagon socket countersunk M5x8 DIN 7991 Elzink 8,8
34	1143	2	Screw M6x60 lower-Zinc DIN 963 Elzink
35	1159	2	Strap for footrest

Part no.	Qty	Description
.	.	.
.	.	.
.	.	.
.	.	.

Product name:	**Legrest, base unit, el. lengthcomp. 100mm**
Product no:	**HP20071051**
Product reference:	**Balder F/L**
Manufacturer:	Etac AS, www.etac.com
Revision:	**01.01.07**

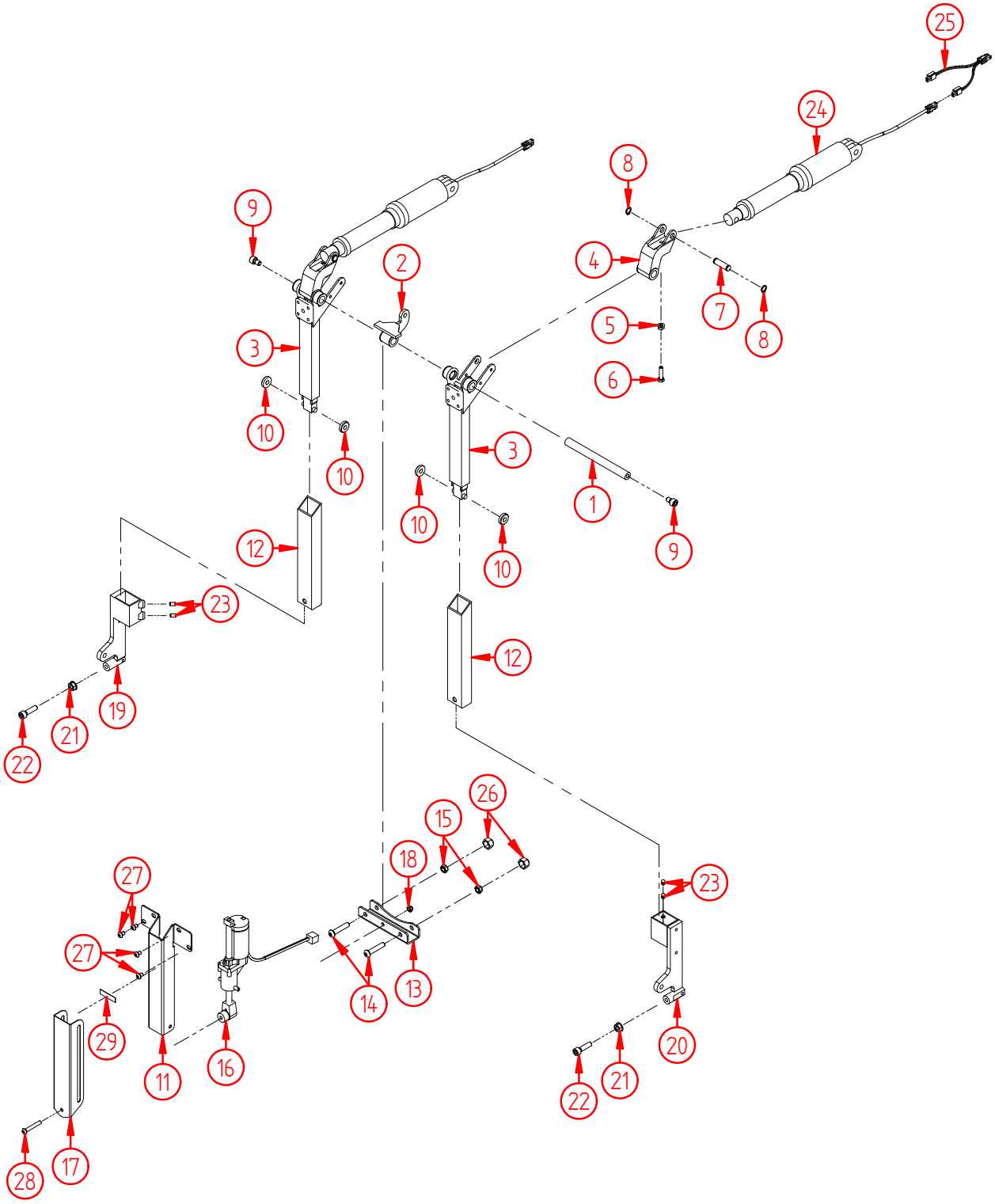

Product name:	**Legrest, base unit, el. lengthcomp. 100mm**
Product no:	**HP20071051**
Product reference:	**Balder F/L**
Manufacturer:	Etac AS, www.etac.com
Revision:	**01.01.07**

Pos no.	Part no.	Qty	Description
1	1148	1	Main shaft-suspension, legrest F/L/J
2	1144	1	Footrest link
3	10148	2	Arm, footrest, 100mm
4	10752	2	Link, actuator, legrest w/el. lengthcomp.
5	1039	2	Nut, tensilock M6 DIN 6923 Goldfinish 8,8
6	000359	2	Screw, hexagon headed M6x25 DIN 933 Elzink 8,8
7	4280	2	Short axle for footrest actuator w/el.length comp
8	1153	4	Circlip Ø10, outside DIN 471 Unplated
9	10751	2	Screw, hexagon socket M8x12 DIN 912 Elzink 8,8
10	1158	4	Telescope wheel, length comp., legrest
11	10146	1	Bracket, actuator 100mm, el. length comp. footrest
12	10147	2	Telescope tube, footrest 100mm, outside
13	4276	1	Bracket for co-ordinated footrest
14	4405	2	Allen screw, pan head, M8x40 ISO 7380 Elzink 10,9
15	1070	2	Nut, nylock M8 DIN 985 El.zink 8,8
16	10016	1	Actuator, legrest, 100mm length compensation F/L/J
17	9301	1	Cover, 100/150mm el. length comp actuator
18	1157	1	Nut, nylock M6 DIN 985 Elzink 8,8
19	3731	1	Bracket for footplate RH
20	3732	1	Bracket for footplate LH
21	1126	2	Nut, tensilock M8 DIN 6923 Goldfinish 8,8
22	4896	2	Screw, hexagon socket M8x30 DIN 912 Elzink 8,8
23	2340	4	Screw, hexagon set, M6x10 DIN 916 Unplated
24	1151	2	Actuator, legrest tilt F/L/J
25	4786	1	Cable for co-ordinated footrest F/L
26	3759	2	Nut cover BK13 M8
27	1212	4	Screw, hexagon socket pan head M6x8 ISO7380 Elzink 10,9
28	9341	1	Screw, hexagon socket pan head M6x40 DIN 7380 Elzink 8,8
29	2586	1	Tape, textilereinforced, silver 38mm x 50m (10mm)

Part no.	Qty	Description
.	.	.
.	.	.
.	.	.
.	.	.

Product name:	**Legrest, base unit, el. lengthcomp. 150mm**
Product no:	**HP20071052**
Product reference:	**Balder F/L**
Manufacturer:	Etac AS, www.etac.com
Revision:	**01.01.07**

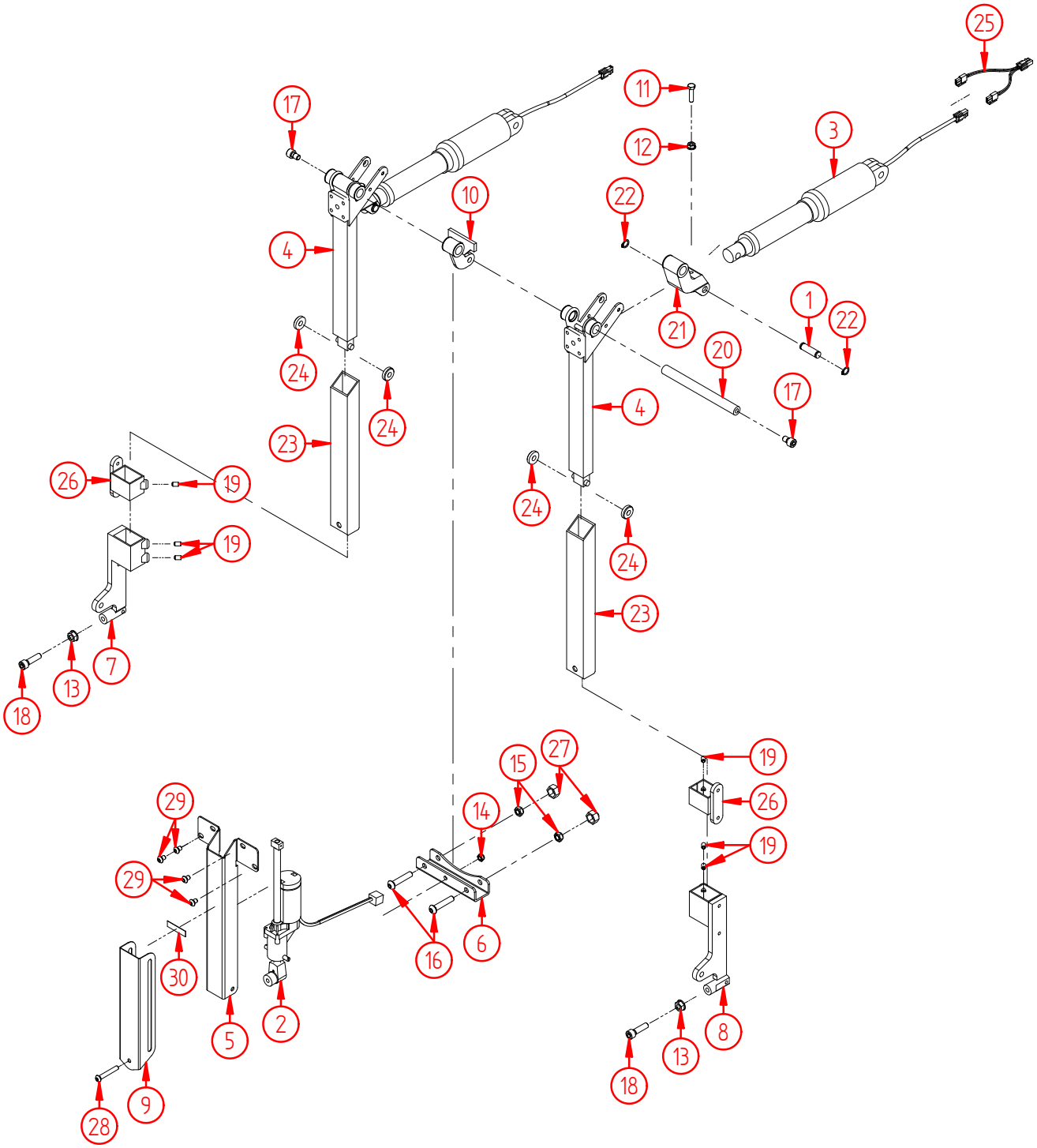

Product name:	**Legrest, base unit, el. lengthcomp. 150mm**
Product no:	**HP20071052**
Product reference:	**Balder F/L**
Manufacturer:	Etac AS, www.etac.com
Revision:	**01.01.07**

Pos no.	Part no.	Qty	Description
1	4280	2	Short axle for footrest actuator w/el.length comp
2	1375	1	Actuator, legrest, 150mm length compensation F/L
3	1151	2	Actuator, legrest tilt F/L/J
4	1132	2	Arm, footrest, 150mm /el. senter footrest
5	4277	1	Bracket, actuator 150/200mm, el. length comp. footrest
6	4276	1	Bracket for co-ordinated footrest
7	3731	1	Bracket for footplate RH
8	3732	1	Bracket for footplate LH
9	9301	1	Cover, 100/150mm el. length comp actuator
10	1144	1	Footrest link
11	000359	2	Screw, hexagon headed M6x25 DIN 933 Elzink 8,8
12	1039	2	Nut, tensilock M6 DIN 6923 Goldfinish 8,8
13	1126	2	Nut, tensilock M8 DIN 6923 Goldfinish 8,8
14	1157	1	Nut, nylock M6 DIN 985 Elzink 8,8
15	1070	2	Nut, nylock M8 DIN 985 El.zink 8,8
16	4405	2	Allen screw, pan head, M8x40 ISO 7380 Elzink 10,9
17	10751	2	Screw, hexagon socket M8x12 DIN 912 Elzink 8,8
18	4896	2	Screw, hexagon socket M8x30 DIN 912 Elzink 8,8
19	2340	6	Screw, hexagon set, M6x10 DIN 916 Unplated
20	1148	1	Main shaft-suspension, legrest F/L/J
21	10752	2	Link, actuator, legrest w/el. lengthcomp.
22	1153	4	Circlip Ø10, outside DIN 471 Unplated
23	1123	2	Telescope tube, footrest 150/200, outside
24	1158	4	Telescope wheel, length comp., legrest
25	4786	1	Cable for co-ordinated footrest F/L
26	3729	2	Bracket calf pad/telscope
27	3759	2	Nut cover BK13 M8
28	9341	1	Screw, hexagon socket pan head M6x40 DIN 7380 Elzink 8,8
29	1212	4	Screw, hexagon socket pan head M6x8 ISO7380 Elzink 10,9
30	2586	1	Tape, textilereinforced, silver 38mm x 50m (10mm)

Part no.	Qty	Description
.	.	.
.	.	.
.	.	.
.	.	.

Product name:	**Legrest, base unit, el. lengthcomp. 200mm**
Product no:	**HP20071053**
Product reference:	**Balder F/L**
Manufacturer:	Etac AS, www.etac.com
Revision:	**01.01.07**

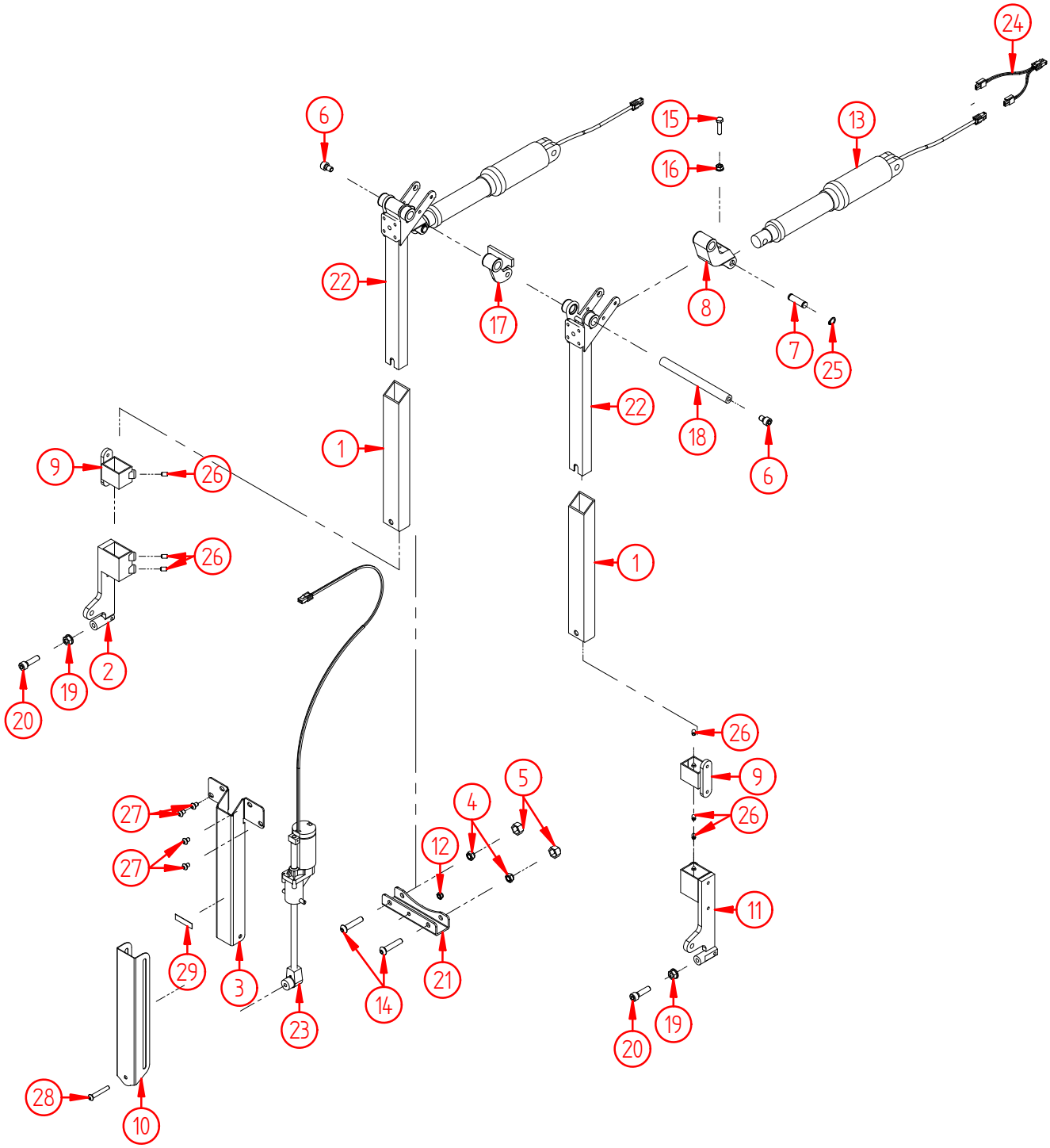

Product name:	**Legrest, base unit, el. lengthcomp. 200mm**
Product no:	**HP20071053**
Product reference:	**Balder F/L**
Manufacturer:	Etac AS, www.etac.com
Revision:	**01.01.07**

Pos no.	Part no.	Qty	Description
1	1123	2	Telescope tube, footrest 150/200, outside
2	3731	1	Bracket for footplate RH
3	4277	1	Bracket, actuator 150/200mm, el. length comp. footrest
4	1070	2	Nut, nylock M8 DIN 985 El.zink 8,8
5	3759	2	Nut cover BK13 M8
6	10751	2	Screw, hexagon socket M8x12 DIN 912 Elzink 8,8
7	4280	2	Short axle for footrest actuator w/el.length comp
8	10752	2	Link, actuator, legrest w/el. lengthcomp.
9	3729	2	Bracket calf pad/telscope
10	10142	1	Cover, 200mm el. length comp actuator
11	3732	1	Bracket for footplate LH
12	1157	1	Nut, nylock M6 DIN 985 Elzink 8,8
13	1151	2	Actuator, legrest tilt F/L/J
14	4405	2	Allen screw, pan head, M8x40 ISO 7380 Elzink 10,9
15	000359	2	Screw, hexagon headed M6x25 DIN 933 Elzink 8,8
16	1039	2	Nut, tensilock M6 DIN 6923 Goldfinish 8,8
17	1144	1	Footrest link
18	1148	1	Main shaft-suspension, legrest F/L/J
19	1126	2	Nut, tensilock M8 DIN 6923 Goldfinish 8,8
20	4896	2	Screw, hexagon socket M8x30 DIN 912 Elzink 8,8
21	4276	1	Bracket for co-ordinated footrest
22	10149	2	Arm, footrest, 200mm
23	10017	1	Actuator, legrest, 200mm length compensation F/L
24	4786	1	Cable for co-ordinated footrest F/L
25	1153	4	Circlip Ø10, outside DIN 471 Unplated
26	2340	6	Screw, hexagon set, M6x10 DIN 916 Unplated
27	1212	4	Screw, hexagon socket pan head M6x8 ISO7380 Elzink 10,9
28	9341	1	Screw, hexagon socket pan head M6x40 DIN 7380 Elzink 8,8
29	2586	1	Tape, textilereinforced, silver 38mm x 50m (10mm)

Part no.	Qty	Description
.	.	.
.	.	.
.	.	.
.	.	.

Product name:	**Footplate, divided, right, large (D:22cm)**
Product no:	**HP20071054**
Product reference:	**Balder F/L**
Manufacturer:	Etac AS, www.etac.com
Revision:	**01.01.07**

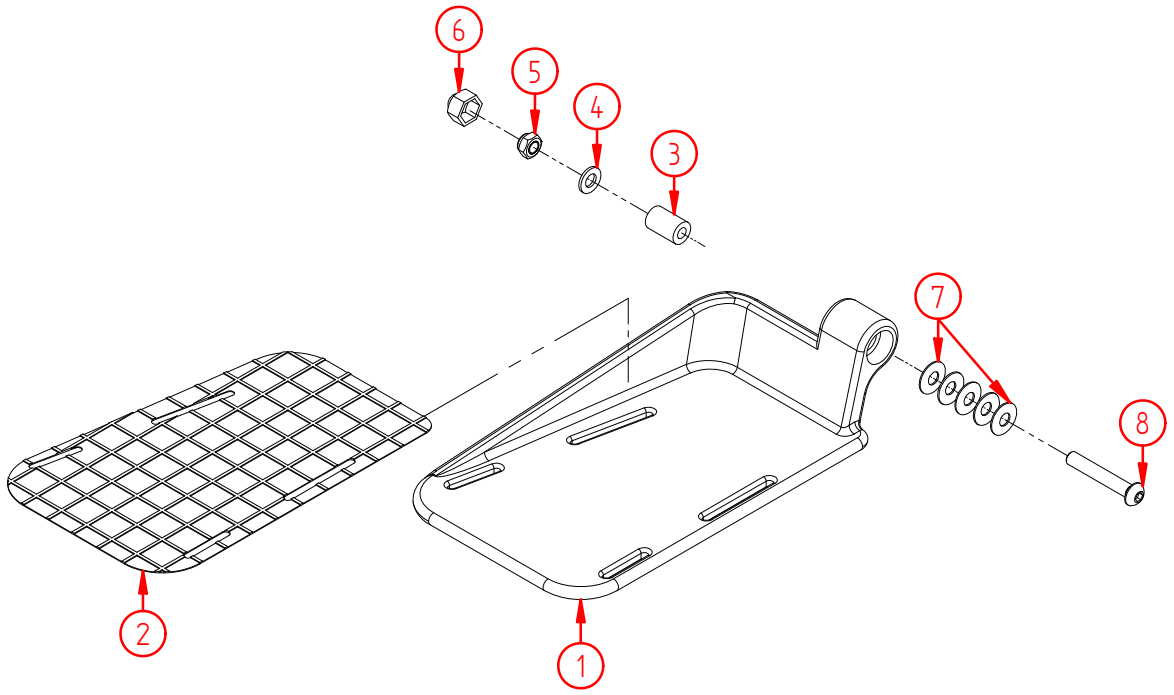

Product name:	**Footplate, divided, left, large (D:22cm)**
Product no:	**HP20071055**
Product reference:	**Balder F/L**
Manufacturer:	Etac AS, www.etac.com
Revision:	**01.01.07**

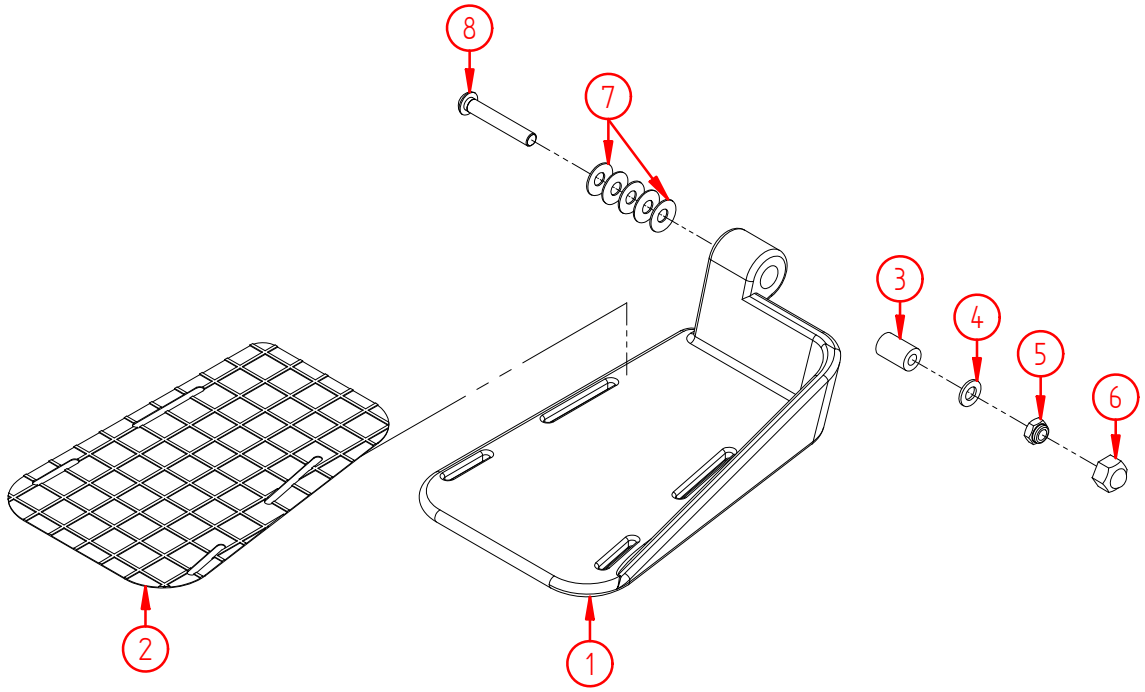

Product name:	**Footplate, divided, right, large (D:22cm)**
Product no:	**HP20071054**
Product reference:	**Balder F/L**
Manufacturer:	Etac AS, www.etac.com
Revision:	**01.01.07**

Pos no.	Part no.	Qty	Description
1	1121	1	Footplate, RH, (large:D22cm), F/L
2	4771	1	Anti slip, footrest, RH, F/L
3	3725	1	Axle for footplate
4	1340	1	Washer M8 DIN 125 Elzink
5	1070	1	Nut, nylock M8 DIN 985 El.zink 8,8
6	3759	1	Nut cover BK13 M8
7	3750	5	Diskspring 20x8, 2x0,9
8	1217	1	Screw, hexagon socket pan head M8x50 DIN 7380 Elzink 8,8

Product name:	**Footplate, divided, left, large (D:22cm)**
Product no:	**HP20071055**
Product reference:	**Balder F/L**
Manufacturer:	Etac AS, www.etac.com
Revision:	**01.01.07**

Pos no.	Part no.	Qty	Description
1	1122	1	Footplate, LH, (large:D22cm), F/L
2	4772	1	Anti slip, footrest, LH, F/L
3	3725	1	Axle for footplate
4	1340	1	Washer M8 DIN 125 Elzink
5	1070	1	Nut, nylock M8 DIN 985 El.zink 8,8
6	3759	1	Nut cover BK13 M8
7	3750	5	Diskspring 20x8, 2x0,9
8	1217	1	Screw, hexagon socket pan head M8x50 DIN 7380 Elzink 8,8

Product name:	**Footplate, divided, right, small (D:16cm)**
Product no:	**HP20071056**
Product reference:	**Balder F/L**
Manufacturer:	Etac AS, www.etac.com
Revision:	**01.01.07**

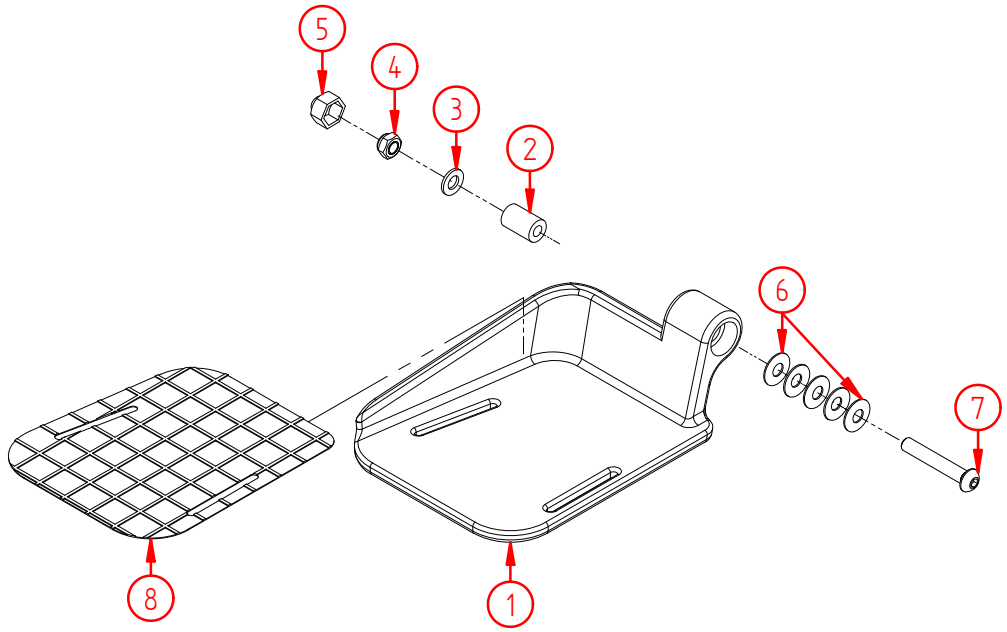

Product name:	**Footplate, divided, left, small (D:16cm)**
Product no:	**HP20071057**
Product reference:	**Balder F/L**
Manufacturer:	Etac AS, www.etac.com
Revision:	**01.01.07**

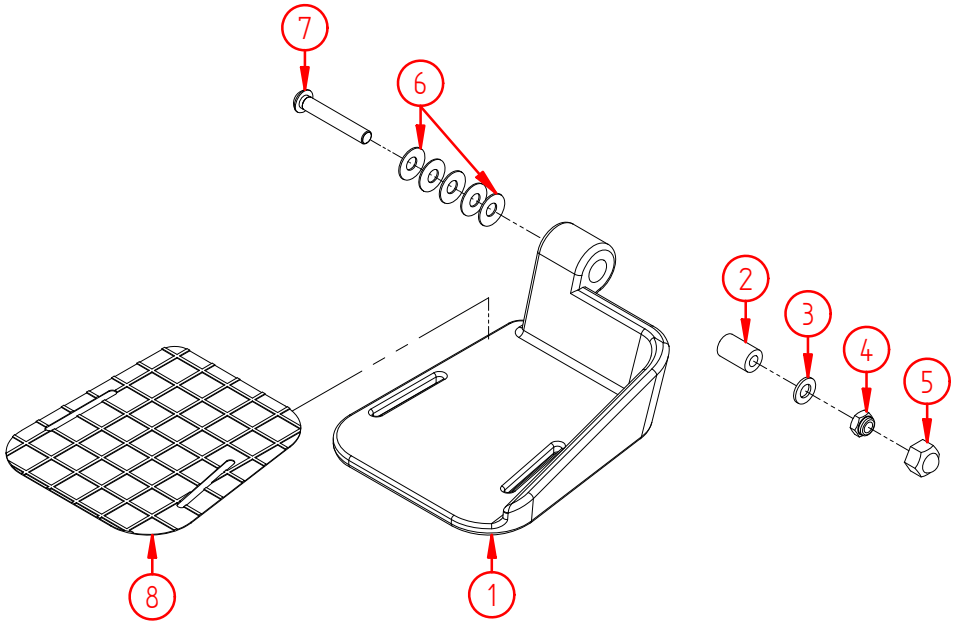

Product name:	**Footplate, divided, right, small (D:16cm)**
Product no:	**HP20071056**
Product reference:	**Balder F/L**
Manufacturer:	Etac AS, www.etac.com
Revision:	**01.01.07**

Pos no.	Part no.	Qty	Description
1	10151	1	Footplate, RH, (small:D16cm), Junior
2	3725	1	Axle for footplate
3	1340	1	Washer M8 DIN 125 Elzink
4	1070	1	Nut, nylock M8 DIN 985 El.zink 8,8
5	3759	1	Nut cover BK13 M8
6	3750	5	Diskspring 20x8, 2x0,9
7	1217	1	Screw, hexagon socket pan head M8x50 DIN 7380 Elzink 8,8
8	10153	1	Anti slip, footrest, RH, Junior

Product name:	**Footplate, divided, left, small (D:16cm)**
Product no:	**HP20071057**
Product reference:	**Balder F/L**
Manufacturer:	Etac AS, www.etac.com
Revision:	**01.01.07**

Pos no.	Part no.	Qty	Description
1	10152	1	Footplate, LH, (small:D16cm), Junior
2	3725	1	Axle for footplate
3	1340	1	Washer M8 DIN 125 Elzink
4	1070	1	Nut, nylock M8 DIN 985 El.zink 8,8
5	3759	1	Nut cover BK13 M8
6	3750	5	Diskspring 20x8, 2x0,9
7	1217	1	Screw, hexagon socket pan head M8x50 DIN 7380 Elzink 8,8
8	10154	1	Anti slip, footrest, LH, Junior

Product name:	**Footplate, single, Balder F/L**
Product no:	**HP20071058**
Product reference:	**Balder F/L**
Manufacturer:	Etac AS, www.etac.com
Revision:	**01.01.07**

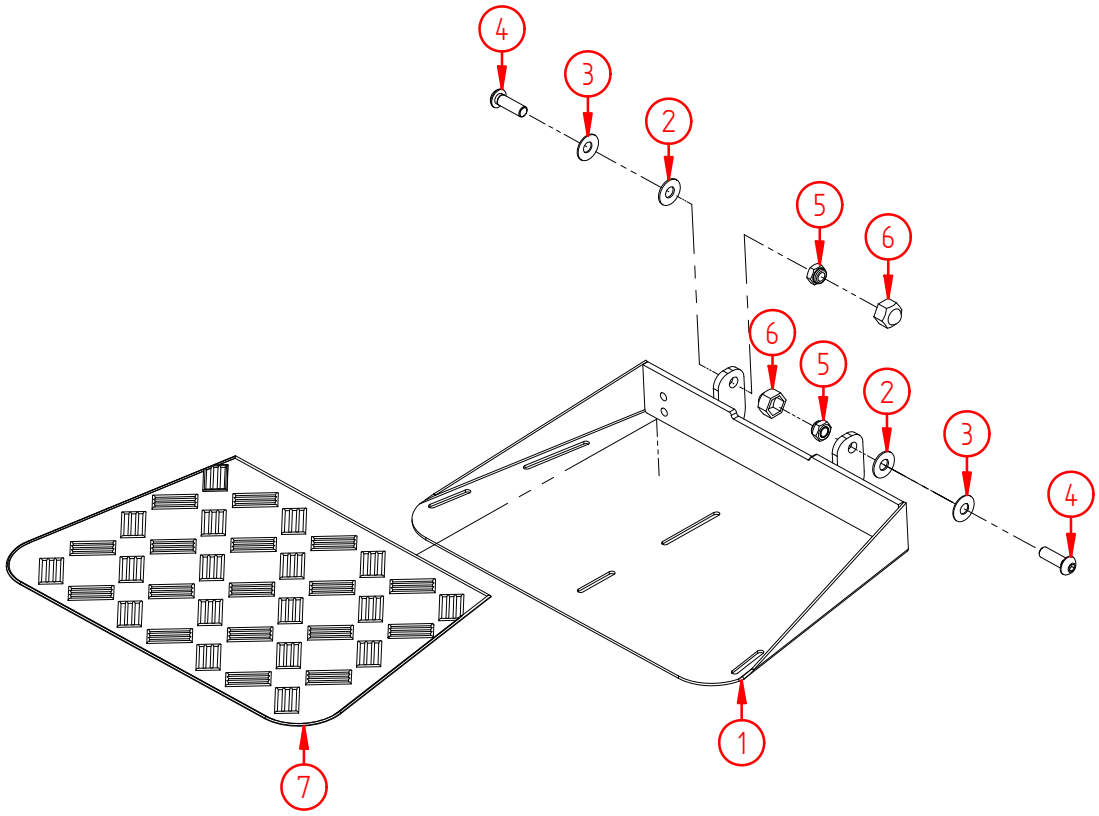

Product name:	**Footplate, single, Balder J**
Product no:	**HP20071059**
Product reference:	**Balder F/L**
Manufacturer:	Etac AS, www.etac.com
Revision:	**01.01.07**

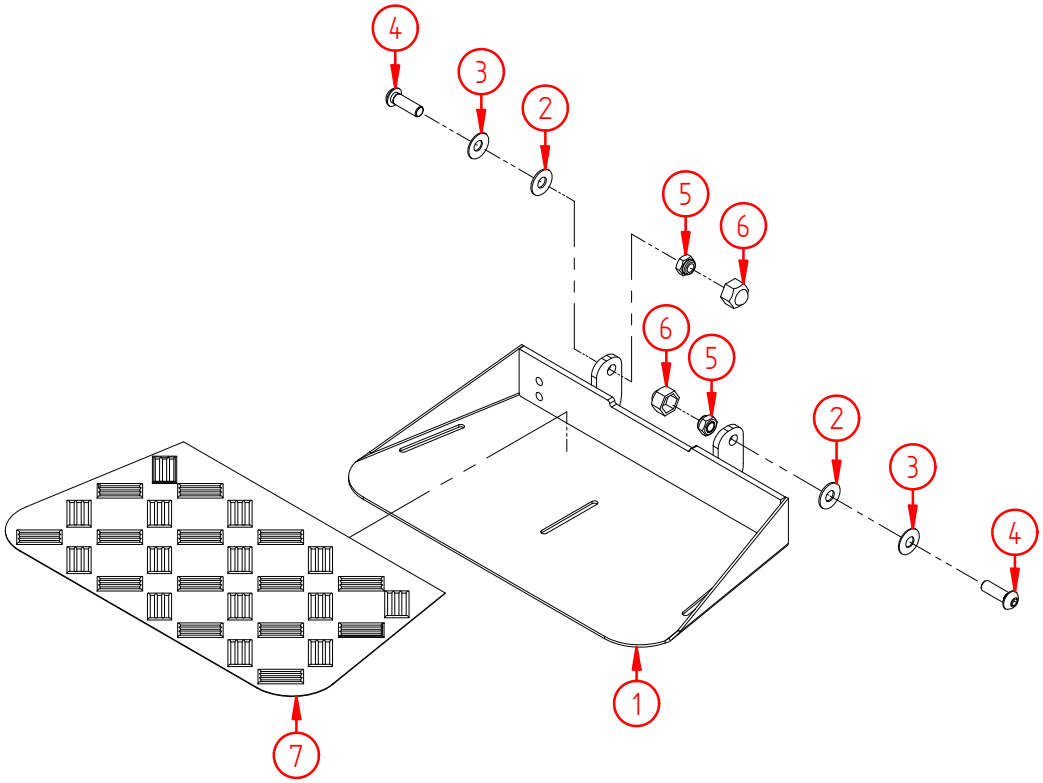

Product name:	**Footplate, single, Balder F/L**
Product no:	**HP20071058**
Product reference:	**Balder F/L**
Manufacturer:	Etac AS, www.etac.com
Revision:	**01.01.07**

Pos no.	Part no.	Qty	Description
1	9400	1	Single footplate F/L
2	1064	2	Washer M8x20 DIN 522 Elzink
3	3750	2	Diskspring 20x8, 2x0,9
4	1124	2	Screw, hexagon socket pan head M8x25 DIN 7380 Elzink 8,8
5	1070	2	Nut, nylock M8 DIN 985 El.zink 8,8
6	3759	2	Nut cover BK13 M8
7	11435	1	Rubbersheet, single footplate, Balder F/L

Product name:	**Footplate, single, Balder J**
Product no:	**HP20071059**
Product reference:	**Balder F/L**
Manufacturer:	Etac AS, www.etac.com
Revision:	**01.01.07**

Pos no.	Part no.	Qty	Description
1	11048	1	Single footplate Junior
2	1064	2	Washer M8x20 DIN 522 Elzink
3	3750	2	Diskspring 20x8, 2x0,9
4	1124	2	Screw, hexagon socket pan head M8x25 DIN 7380 Elzink 8,8
5	1070	2	Nut, nylock M8 DIN 985 El.zink 8,8
6	3759	2	Nut cover BK13 M8
7	11436	1	Rubbersheet, single footplate, Balder J

Product name:	**Calf pad,(large:W:12 H:22), complete**
Product no:	**HP20071060**
Product reference:	**Balder F/L**
Manufacturer:	Etac AS,□□www.etac.com
Revision:	**01.01.07**

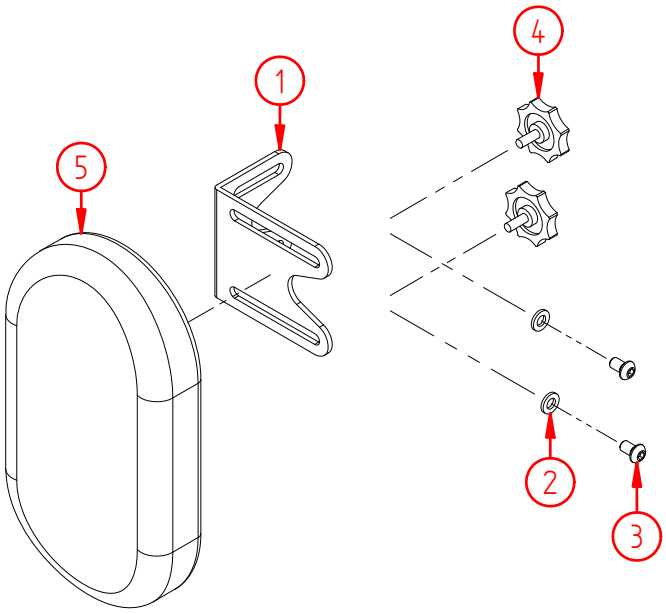

Product name:	**Calf pad,(small:W:12 H:16), complete**
Product no:	**HP20071061**
Product reference:	**Balder F/L**
Manufacturer:	Etac AS,□□www.etac.com
Revision:	**01.01.07**

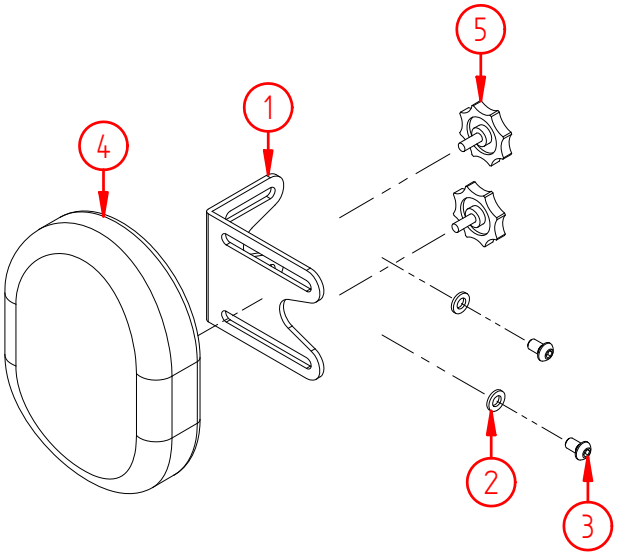

Product name:	**Calf pad,(large:W:12 H:22), complete**
Product no:	**HP20071060**
Product reference:	**Balder F/L**
Manufacturer:	Etac AS,□□www.etac.com
Revision:	**01.01.07**

Pos no.	Part no.	Qty	Description
1	1127	1	Bracket, angle calf pad
2	1311	2	Washer M6 DIN 125 Elzink
3	3727	2	Screw, hexagon socket pan head M6x10 ISO7380 Elzink 10,9
4	4887	2	Locking handle HSØ35 M5-16-13
5	10155	1	Leggpute (stor B:12 H:22), F/L

Product name:	**Calf pad,(small:W:12 H:16), complete**
Product no:	**HP20071061**
Product reference:	**Balder F/L**
Manufacturer:	Etac AS,□□www.etac.com
Revision:	**01.01.07**

Pos no.	Part no.	Qty	Description
1	1127	1	Bracket, angle calf pad
2	1311	2	Washer M6 DIN 125 Elzink
3	3727	2	Screw, hexagon socket pan head M6x10 ISO7380 Elzink 10,9
4	10156	1	Calf pad,(small:W:12 H:16), F/L/J
5	4887	2	Locking handle HSØ35 M5-16-13

Product name:	**Legrest, manual, right, Balder F/L 1-3**
Product no:	**HP20071308**
Product reference:	**Balder F/L**
Manufacturer:	Etac AS, www.etac.com
Revision:	**01.01.07**

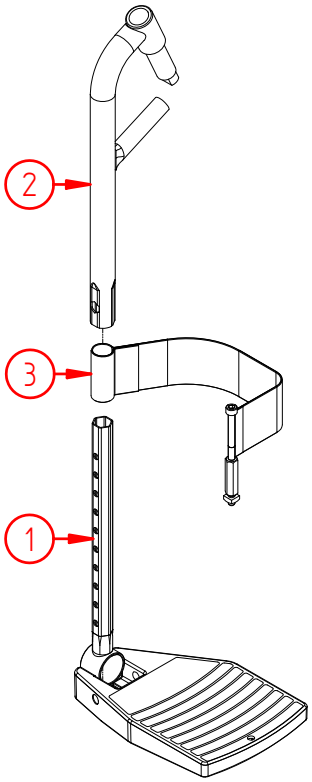

Product name:	**Legrest, manual, left, Balder F/L 1-3**
Product no:	**HP20071309**
Product reference:	**Balder F/L**
Manufacturer:	Etac AS, www.etac.com
Revision:	**01.01.07**

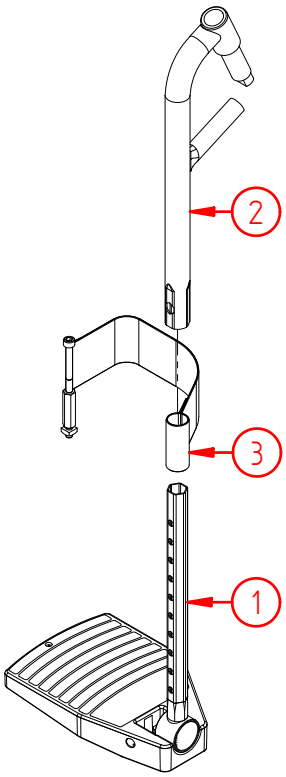

Product name:	**Legrest, manual, right, Balder F/L 1-3**
Product no:	**HP20071308**
Product reference:	**Balder F/L**
Manufacturer:	Etac AS, www.etac.com
Revision:	**01.01.07**

Pos no.	Part no.	Qty	Description
1	11721	1	Footplate, ETAC CROSS 40cm RH
2	11723	1	Legrest fixation MRS CROSS std
3	11725	1	Heel band MRS ETAC CROSS footplate

Product name:	**Legrest, manual, left, Balder F/L 1-3**
Product no:	**HP20071309**
Product reference:	**Balder F/L**
Manufacturer:	Etac AS, www.etac.com
Revision:	**01.01.07**

Pos no.	Part no.	Qty	Description
1	11722	1	Footplate, ETAC CROSS 40cm LH
2	11723	1	Legrest fixation MRS CROSS std
3	11725	1	Heel band MRS ETAC CROSS footplate

Product name:	**Legrest, manual, right, Balder F/L 4-6**
Product no:	**HP20071310**
Product reference:	**Balder F/L**
Manufacturer:	Etac AS, www.etac.com
Revision:	**01.01.07**

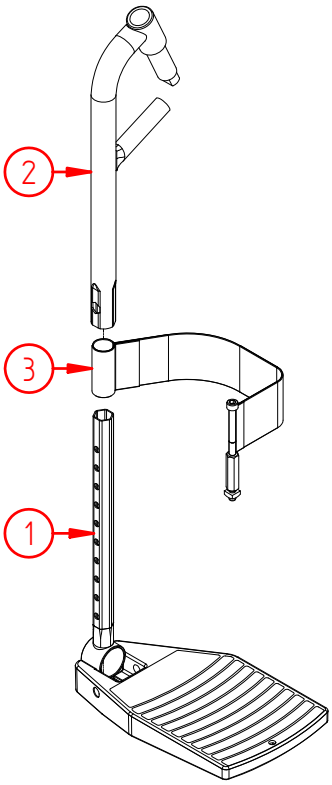

Product name:	**Legrest, manual, left, Balder F/L 4-6**
Product no:	**HP20071311**
Product reference:	**Balder F/L**
Manufacturer:	Etac AS, www.etac.com
Revision:	**01.01.07**

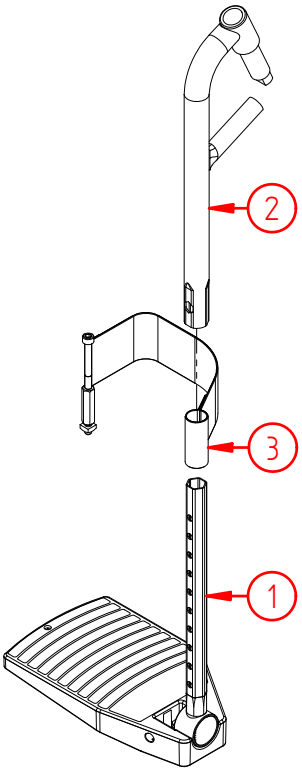

Product name:	**Legrest, manual, right, Balder F/L 4-6**
Product no:	**HP20071310**
Product reference:	**Balder F/L**
Manufacturer:	Etac AS, www.etac.com
Revision:	**01.01.07**

Pos no.	Part no.	Qty	Description
1	000623	1	Footplate, ETAC CROSS 45cm RH
2	11723	1	Legrest fixation MRS CROSS std
3	11725	1	Heel band MRS ETAC CROSS footplate

Product name:	**Legrest, manual, left, Balder F/L 4-6**
Product no:	**HP20071311**
Product reference:	**Balder F/L**
Manufacturer:	Etac AS, www.etac.com
Revision:	**01.01.07**

Pos no.	Part no.	Qty	Description
1	000624	1	Footplate, ETAC CROSS 45cm LH
2	11723	1	Legrest fixation MRS CROSS std
3	11725	1	Heel band MRS ETAC CROSS footplate

Product name:	**Legrest, manual, right, Balder J**
Product no:	**HP20071312**
Product reference:	**Balder J**
Manufacturer:	Etac AS, www.etac.com
Revision:	**01.01.07**

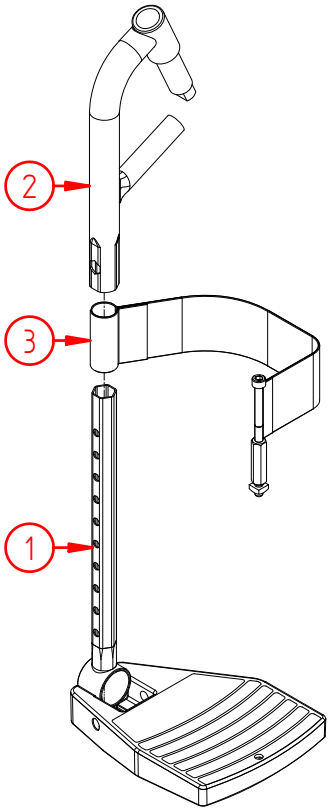

Product name:	**Legrest, manual, left, Balder J**
Product no:	**HP20071313**
Product reference:	**Balder J**
Manufacturer:	Etac AS, www.etac.com
Revision:	**01.01.07**

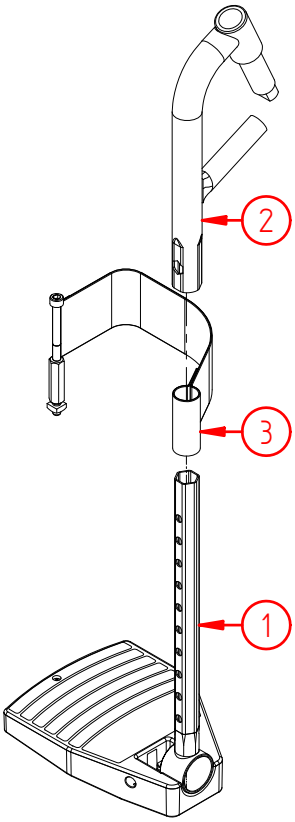

Product name:	**Legrest, manual, right, Balder J**
Product no:	**HP20071312**
Product reference:	**Balder J**
Manufacturer:	Etac AS, www.etac.com
Revision:	**01.01.07**

Pos no.	Part no.	Qty	Description
1	11719	1	Footplate, ETAC CROSS 35cm RH
2	11724	1	Legrest fixation MRS CROSS short
3	11725	1	Heel band MRS ETAC CROSS footplate

Product name:	**Legrest, manual, left, Balder J**
Product no:	**HP20071313**
Product reference:	**Balder J**
Manufacturer:	Etac AS, www.etac.com
Revision:	**01.01.07**

Pos no.	Part no.	Qty	Description
1	11720	1	Footplate, ETAC CROSS 35cm LH
2	11724	1	Legrest fixation MRS CROSS short
3	11725	1	Heel band MRS ETAC CROSS footplate

Product name:	**Wheels for legrest, (for el.footrests)**
Product no:	**HP20071315**
Product reference:	**Balder F/L**
Manufacturer:	Etac AS, www.etac.com
Revision:	**01.01.07**

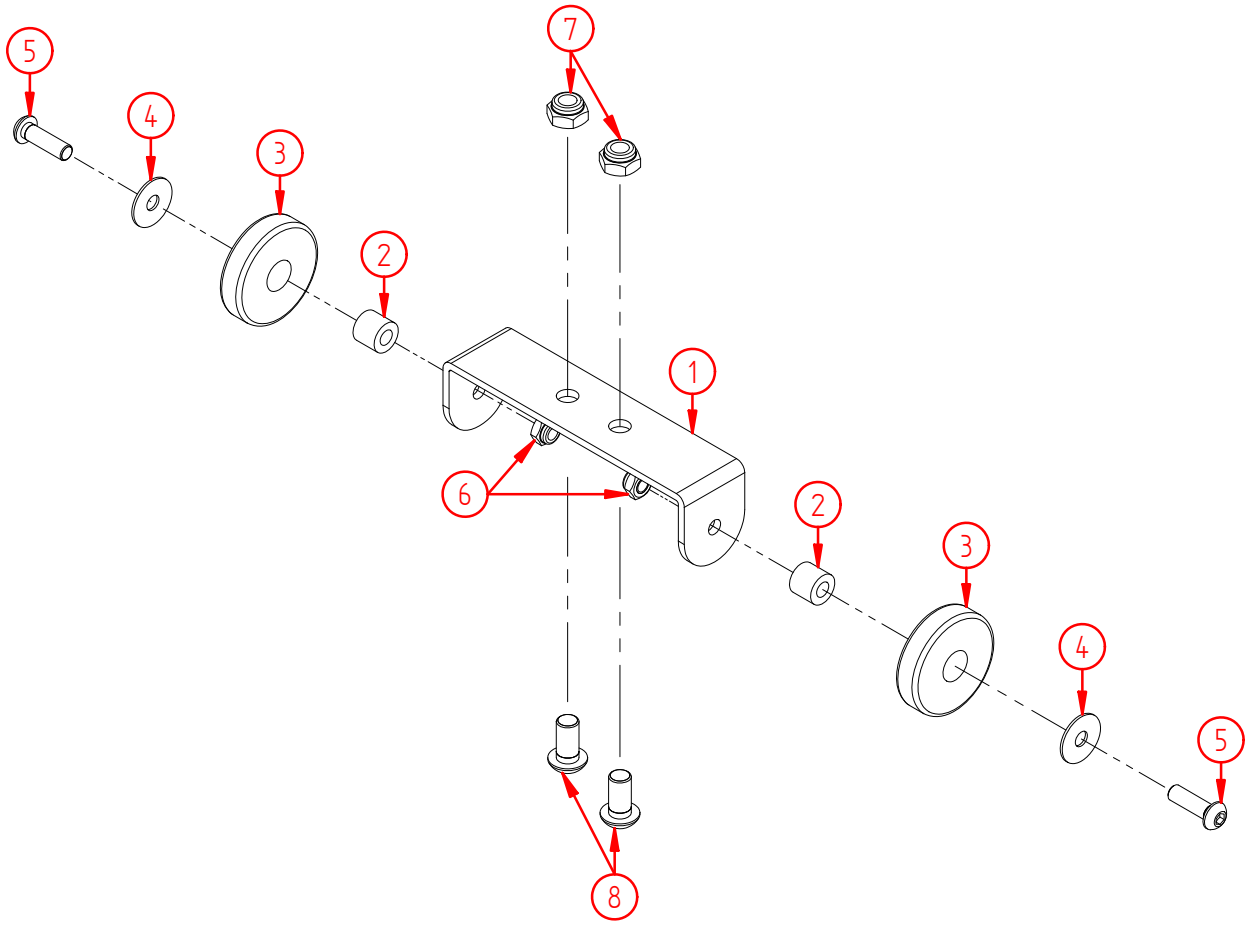

Product name:	**Wheels for legrest, (for el.footrests)**
Product no:	**HP20071315**
Product reference:	**Balder F/L**
Manufacturer:	Etac AS, www.etac.com
Revision:	**01.01.07**

Pos no.	Part no.	Qty	Description
1	5016	1	Bracket for footrest wheel F/L
2	4263	2	Sleeve for wheel, legrest
3	4264	2	Wheel for legrest
4	1338	2	Washer M6x20 DIN 522 Elzink
5	1346	2	Screw, hexagon socket pan head M6x20 DIN 7380 Elzink 10,9
6	1157	2	Nut, nylock M6 DIN 985 Elzink 8,8
7	1070	2	Nut, nylock M8 DIN 985 El.zink 8,8
8	1213	2	Screw, hexagon socket pan head M8x16 DIN 7380 Elzink 8,8

Part no.	Qty	Description
.	.	.
.	.	.
.	.	.
.	.	.

Product name:	**Toe strap, legrest Balder (1pc)**
Product no:	**HP20071329**
Product reference:	**Balder F/L**
Manufacturer:	Etac AS, www.etac.com
Revision:	**01.01.07**

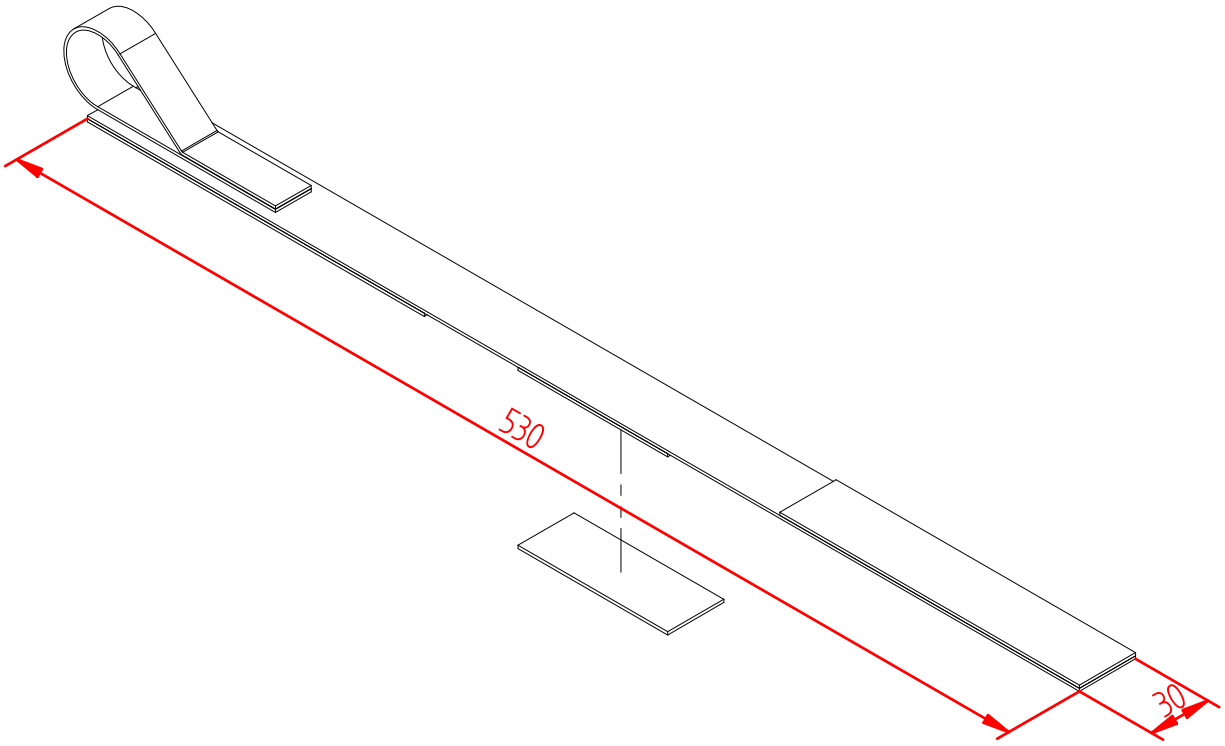

Product name:	**Legrest, single 35-37,5cm, manual, Balder F/L 1-3-J**
Product no:	**HP20071330**
Product reference:	**Balder F/L/J**
Manufacturer:	Etac AS, www.etac.com
Revision:	**01.01.07**

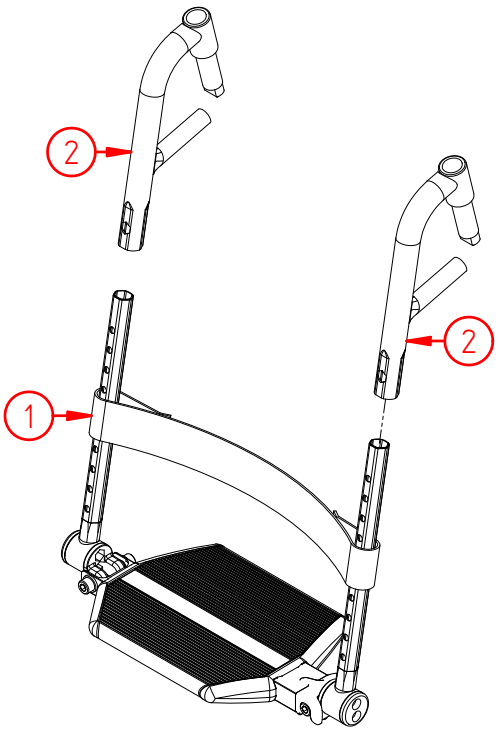

Product name:	**Legrest, single 40-50cm, manual, Balder F/L 4-6**
Product no:	**HP20071331**
Product reference:	**Balder F/L**
Manufacturer:	Etac AS, www.etac.com
Revision:	**01.01.07**

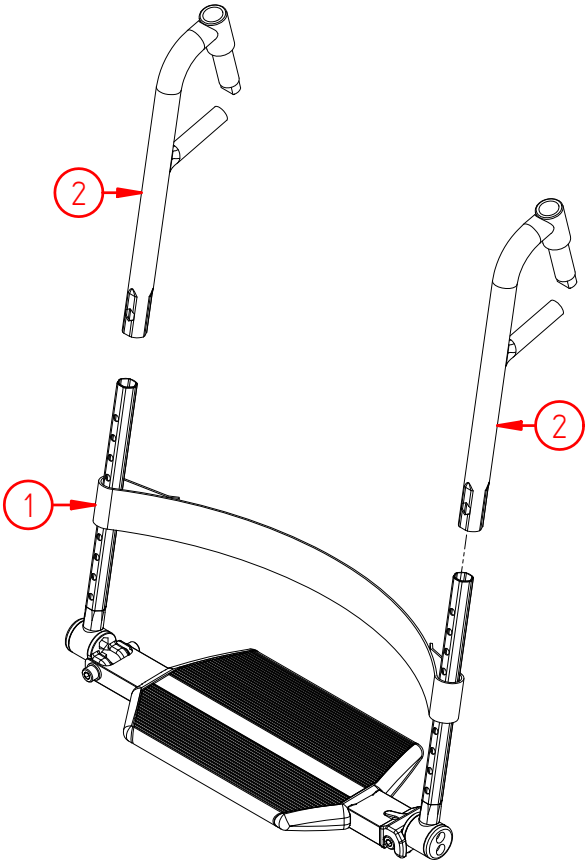

Product name:	**Legrest, single 35-37,5cm, manual, Balder F/L 1-3-J**
Product no:	**HP20071330**
Product reference:	**Balder F/L/J**
Manufacturer:	Etac AS, www.etac.com
Revision:	**01.01.07**

Pos no.	Part no.	Qty	Description
1	11847	1	Footplate, single complet ETAC CROSS 35-37,5cm
2	11724	2	Legrest fixation MRS CROSS short

Product name:	**Legrest, single 40-50cm, manual, Balder F/L 4-6**
Product no:	**HP20071331**
Product reference:	**Balder F/L**
Manufacturer:	Etac AS, www.etac.com
Revision:	**01.01.07**

Pos no.	Part no.	Qty	Description
1	11848	1	Footplate, single complet ETAC CROSS 40-50cm
2	11723	2	Legrest fixation MRS CROSS std

Product name:	**Legrest, manual, right, small angle, Balder F/L 1-3**
Product no:	**HP20071334**
Product reference:	**Balder F/L**
Manufacturer:	Etac AS, www.etac.com
Revision:	**01.04.08**

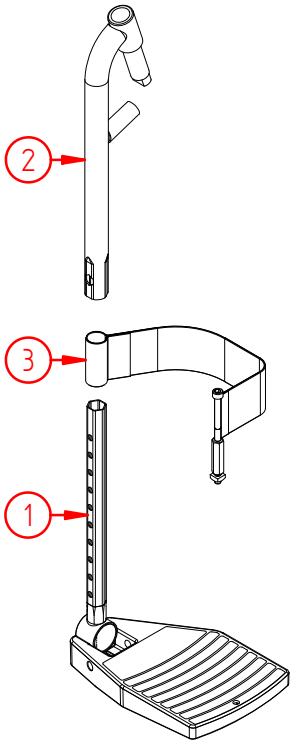

Product name:	**Legrest, manual, left, small angle, Balder F/L 1-3**
Product no:	**HP20071335**
Product reference:	**Balder F/L**
Manufacturer:	Etac AS, www.etac.com
Revision:	**01.04.08**

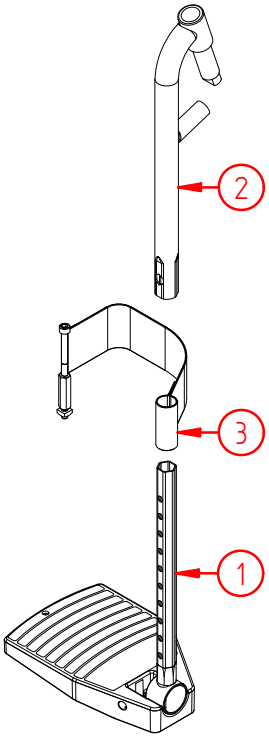

Product name:	**Legrest, manual, right, small angle, Balder F/L 1-3**
Product no:	**HP20071334**
Product reference:	**Balder F/L**
Manufacturer:	Etac AS, www.etac.com
Revision:	**01.04.08**

Pos no.	Part no.	Qty	Description
1	11721	1	Footplate, ETAC CROSS 40cm RH
2	12242	1	Legrest fixation MRS CROSS std, small angle
3	11725	1	Heel band MRS ETAC CROSS footplate

Product name:	**Legrest, manual, left, small angle, Balder F/L 1-3**
Product no:	**HP20071335**
Product reference:	**Balder F/L**
Manufacturer:	Etac AS, www.etac.com
Revision:	**01.04.08**

Pos no.	Part no.	Qty	Description
1	11722	1	Footplate, ETAC CROSS 40cm LH
2	12242	1	Legrest fixation MRS CROSS std, small angle
3	11725	1	Heel band MRS ETAC CROSS footplate

Product name:	**Legrest, manual, right, small angle, Balder F/L 4-6**
Product no:	**HP20071336**
Product reference:	**Balder F/L**
Manufacturer:	Etac AS, www.etac.com
Revision:	**01.04.08**

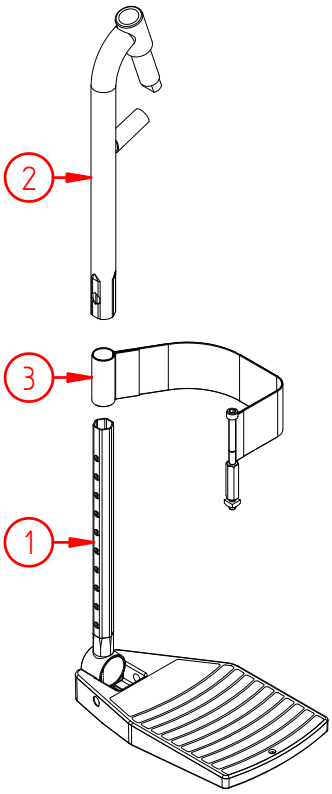

Product name:	**Legrest, manual, left, small angle, Balder F/L 4-6**
Product no:	**HP20071337**
Product reference:	**Balder F/L**
Manufacturer:	Etac AS, www.etac.com
Revision:	**01.04.08**

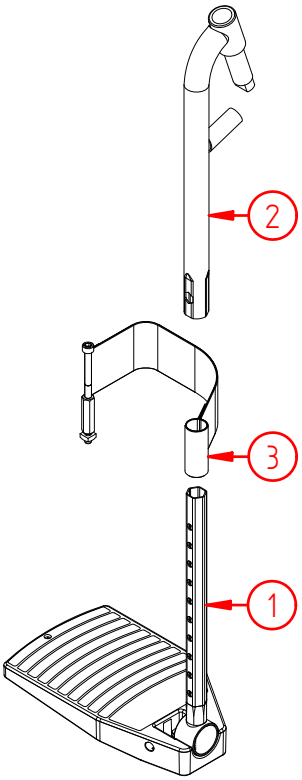

Product name:	**Legrest, manual, right, small angle, Balder F/L 4-6**
Product no:	**HP20071336**
Product reference:	**Balder F/L**
Manufacturer:	Etac AS, www.etac.com
Revision:	**01.04.08**

Pos no.	Part no.	Qty	Description
1	000623	1	Footplate, ETAC CROSS 45cm RH
2	12242	1	Legrest fixation MRS CROSS std, small angle
3	11725	1	Heel band MRS ETAC CROSS footplate

Product name:	**Legrest, manual, left, small angle, Balder F/L 4-6**
Product no:	**HP20071337**
Product reference:	**Balder F/L**
Manufacturer:	Etac AS, www.etac.com
Revision:	**01.04.08**

Pos no.	Part no.	Qty	Description
1	000624	1	Footplate, ETAC CROSS 45cm LH
2	12242	1	Legrest fixation MRS CROSS std, small angle
3	11725	1	Heel band MRS ETAC CROSS footplate

09. Accessories

Product name:	**Clamp down unit, wheelchair unit incl panel, F/J**
Product no:	**HP20071075**
Product reference:	**Balder F/J**
Manufacturer:	Etac AS, www.etac.com
Revision:	**04.12.07**

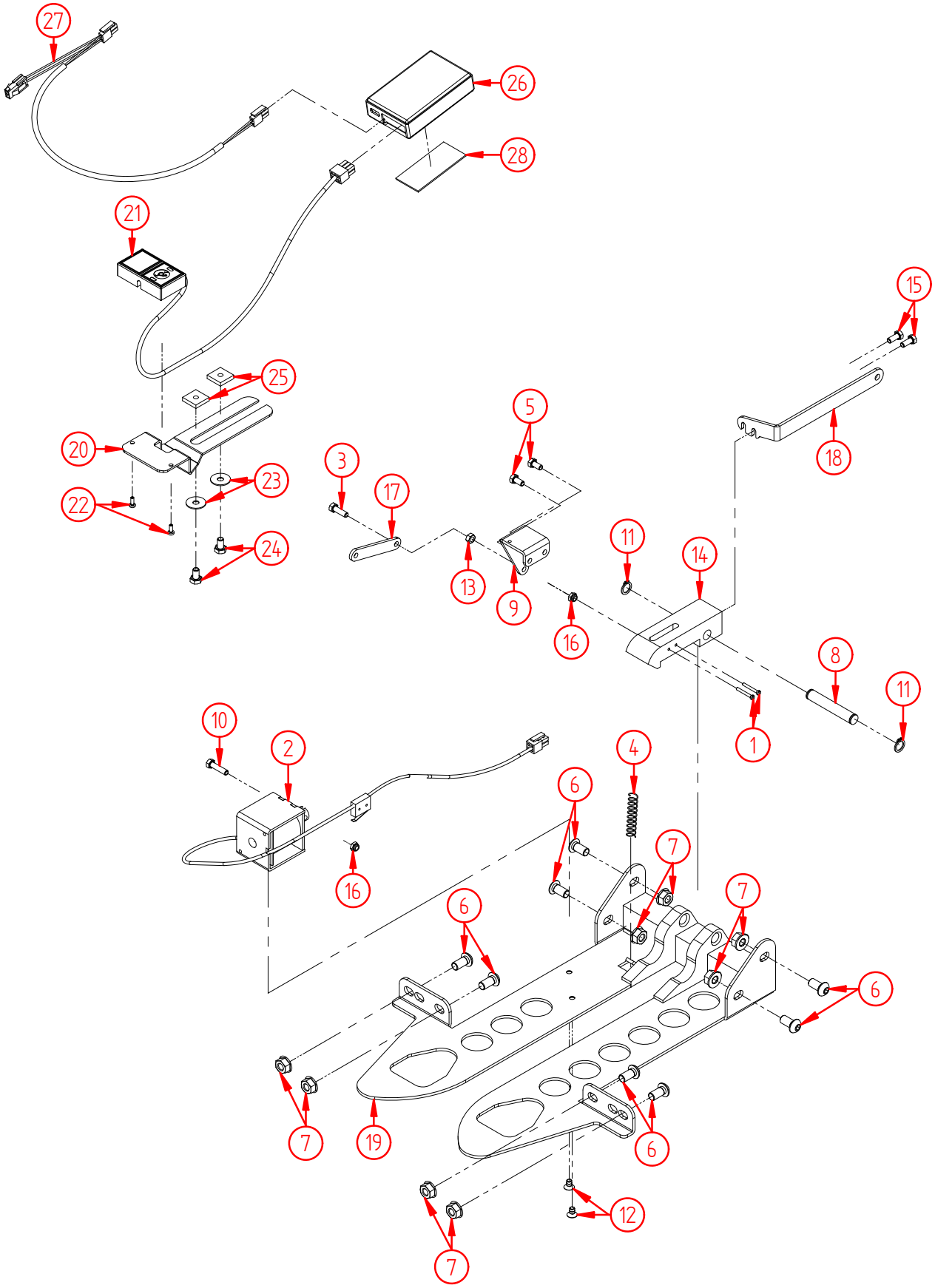

Product name:	**Clamp down unit, wheelchair unit incl panel, F/J**
Product no:	**HP20071075**
Product reference:	**Balder F/J**
Manufacturer:	Etac AS, www.etac.com
Revision:	**04.12.07**

Pos no.	Part no.	Qty	Description
1	4434	2	Screw, slotted, pan head M2,5x20 DIN 84 Elzink
2	10226	1	Solenoid w/microswitch, compl. clamp down unit (from 04092310)
3	5029	1	Screw, hexagon M5x16 DIN 933 Elzink 8,8
4	1319	1	Spring, 0,75x10x40
5	000641	2	Screw, hexagon M5x10 DIN 933 Elzink 8,8
6	1213	8	Screw, hexagon socket pan head M8x16 DIN 7380 Elzink 8,8
7	1126	8	Nut, tensilock M8 DIN 6923 Goldfinish 8,8
8	1371	1	Axle for lock hook, clamp down unit
9	1372	1	Bracket for bar, clamp down unit F/L/J
10	2759	1	Screw, hexagon M5x20 DIN 933 Elzink 8,8
11	1153	2	Circlip Ø10, outside DIN 471 Unplated
12	1137	2	Screw, hexagon socket countersunk M5x8 DIN 7991 Elzink 8,8
13	000367	1	Nut M5 DIN 934 Elzink
14	1369	1	Lock hook, clamp down unit
15	2758	2	Screw, hexagon M5x12 DIN 933 Elzink 8,8
16	1190	2	Nut, nylock M5 DIN 985 Elzink 8,8
17	1357	1	Bar for magnet, clamp down unit F/L/J
18	1370	1	Release lever, clamp down unit F/L/J
19	1368	1	Steering plate, clamp down unit
20	9546	1	Bracket, panel 59x40mm, front armrest F/L/J
21	10223	1	Panel, clamp down complete (from 04092310)
22	4744	2	Screw, cross slotted, pan head M3x8 DIN 7985 Elzink
23	1338	2	Washer M6x20 DIN 522 Elzink
24	2766	2	Screw, hexagon M6x10 DIN 933 Elzink 8,8
25	1276	2	Nut 18x18x4xM6, square, steel
26	10224	1	Electronic, clamp down unit (from no04092310)
27	10657	1	Cable, power sypply, electronic clampdown unit F/L/J
28	1367	1	Velcro for fixation (L: 65mm)

Part no.	Qty	Description
.	.	Alternativer:
20071076	1	Clamp down unit, spigot unit, Balder F/J
10225	1	Bracket, 2 x panel 59x40mm, front armrest F/L/J
.	.	.

Product name:	**Clamp down unit, spigot unit, F/J**
Product no:	**HP20071076**
Product reference:	**Balder F/J**
Manufacturer:	Etac AS, www.etac.com
Revision:	**20.09.07**

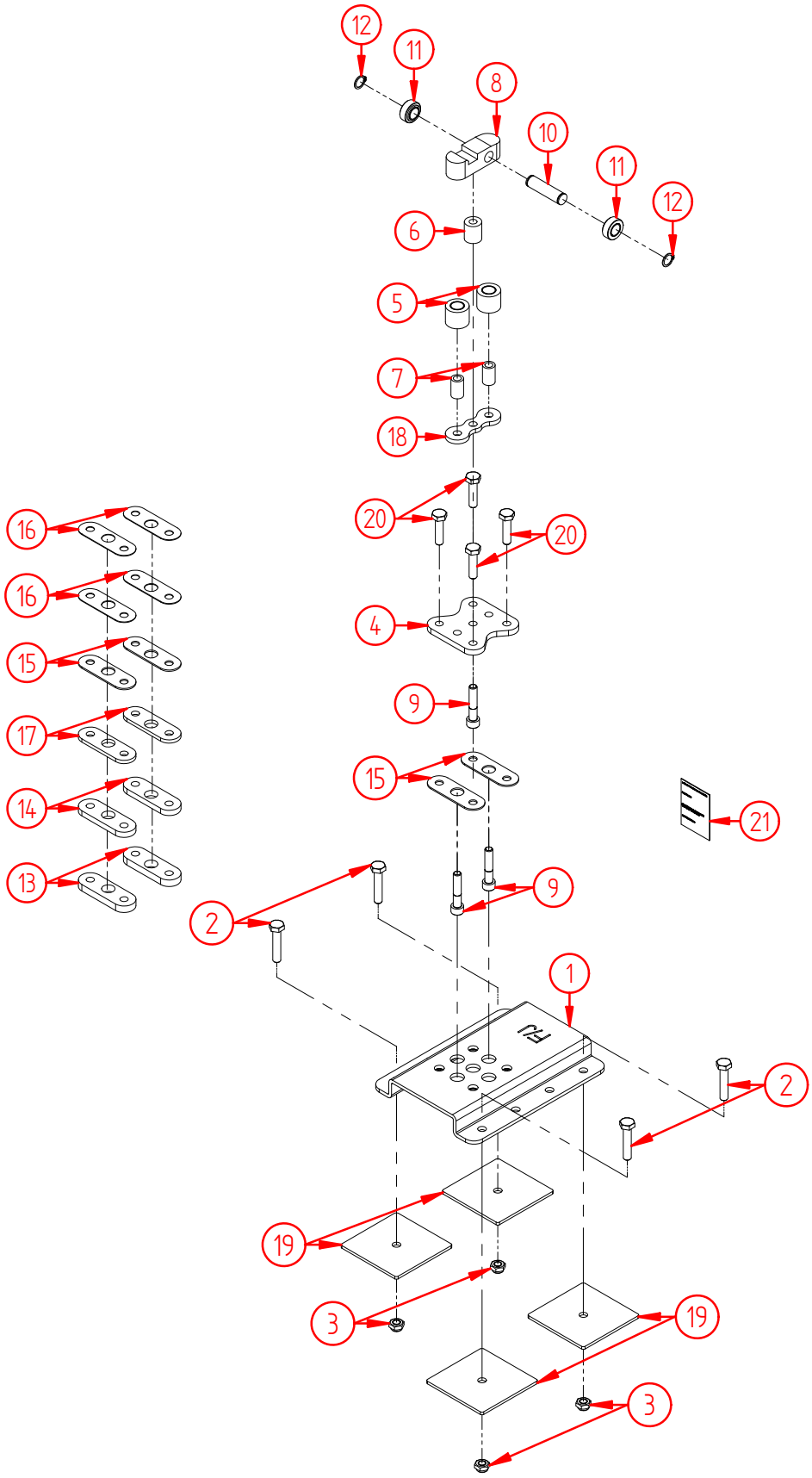

Product name:	**Clamp down unit, spigot unit, F/J**
Product no:	**HP20071076**
Product reference:	**Balder F/J**
Manufacturer:	Etac AS, www.etac.com
Revision:	**20.09.07**

Pos no.	Part no.	Qty	Description
1	1358	1	Main plate, spigot F/J
2	2748	4	Screw, hexagon M10x50 DIN 933 Elzink 8,8
3	1186	4	Nut, nylock M10 DIN 985 Elzink 8,8
4	1359	1	Intermediate plate, spigot F/L/J
5	1360	2	Steering wheel, spigot F/L/J
6	1333	1	Support lining, clamp down unit
7	1363	2	Sleeve for steering wheel, spigot F/L/J
8	1364	1	Reciever, lock hook, spigot F/L/J
9	4655	3	Screw, hexagon socket M10x50 DIN 912 Elzink 8,8
10	1362	1	Axle for main wheel, clamp down unit F/L/J
11	1361	2	Main wheel, spigot F/L/J
12	2562	2	Circlip Ø15, outside DIN 471 Unplated
13	11141	2	Spacer, 10mm, spigot F/L/J
14	11142	2	Spacer, 8mm, spigot F/L/J
15	11144	4	Spacer, 2mm, spigot F/L/J
16	11145	4	Spacer, 1mm, spigot F/L/J
17	11143	2	Spacer, 5mm, spigot F/L/J
18	11146	1	Spacer, steering wheel, spigot F/L/J
19	11147	4	Washer, 100x100mm - ø11mm
20	2728	4	Screw, hexagon M10x40 DIN 933 Elzink 8,8
21	11997	1	Label, Clamp down unit, spigot F/L/J

Part no.	Qty	Description
.	.	.
.	.	.
.	.	.
.	.	.

Product name:	**Clamp down unit, wheelchair unit incl. panel, L**
Product no:	**HP20071077**
Product reference:	**Balder L**
Manufacturer:	Etac AS, www.etac.com
Revision:	**04.12.07**

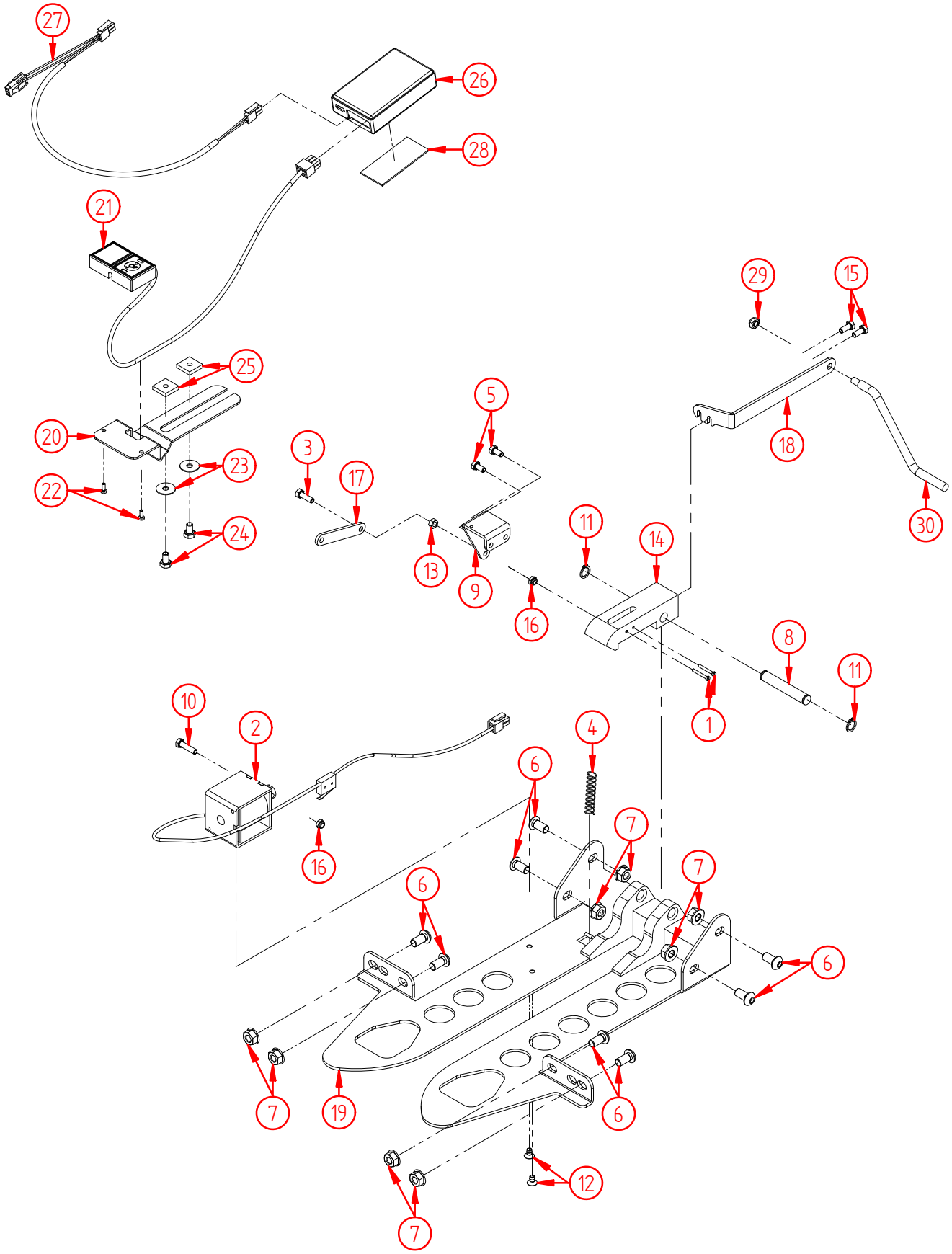

Product name:	**Clamp down unit, wheelchair unit incl. panel, L**
Product no:	**HP20071077**
Product reference:	**Balder L**
Manufacturer:	Etac AS, www.etac.com
Revision:	**04.12.07**

Pos no.	Part no.	Qty	Description
1	4434	2	Screw, slotted, pan head M2,5x20 DIN 84 Elzink
2	10226	1	Solenoid w/microswitch, compl. clamp down unit (from 04092310)
3	5029	1	Screw, hexagon M5x16 DIN 933 Elzink 8,8
4	1319	1	Spring, 0,75x10x40
5	000641	2	Screw, hexagon M5x10 DIN 933 Elzink 8,8
6	1213	8	Screw, hexagon socket pan head M8x16 DIN 7380 Elzink 8,8
7	1126	8	Nut, tensilock M8 DIN 6923 Goldfinish 8,8
8	1371	1	Axle for lock hook, clamp down unit
9	1372	1	Bracket for bar, clamp down unit F/L/J
10	2759	1	Screw, hexagon M5x20 DIN 933 Elzink 8,8
11	1153	2	Circlip Ø10, outside DIN 471 Unplated
12	1137	2	Screw, hexagon socket countersunk M5x8 DIN 7991 Elzink 8,8
13	000367	1	Nut M5 DIN 934 Elzink
14	1369	1	Lock hook, clamp down unit
15	2758	2	Screw, hexagon M5x12 DIN 933 Elzink 8,8
16	1190	2	Nut, nylock M5 DIN 985 Elzink 8,8
17	1357	1	Bar for magnet, clamp down unit F/L/J
18	1370	1	Release lever, clamp down unit F/L/J
19	1368	1	Steering plate, clamp down unit
20	9546	1	Bracket, panel 59x40mm, front armrest F/L/J
21	10223	1	Panel, clamp down complete (from 04092310)
22	4744	2	Screw, cross slotted, pan head M3x8 DIN 7985 Elzink
23	1338	2	Washer M6x20 DIN 522 Elzink
24	2766	2	Screw, hexagon M6x10 DIN 933 Elzink 8,8
25	1276	2	Nut 18x18x4xM6, square, steel
26	10224	1	Electronic, clamp down unit (from no04092310)
27	10657	1	Cable, power sypply, electronic clampdown unit F/L/J
28	1367	1	Velcro for fixation (L: 65mm)
29	1157	1	Nut, nylock M6 DIN 985 Elzink 8,8
30	4926	1	Extention release lever, clamp down L

Part no.	Qty	Description
.	.	Alternativer:
20071078	1	Clamp down unit, spigot unit, Balder L
10225	1	Bracket, 2 x panel 59x40mm, front armrest F/L/J
.	.	.

Product name:	**Clamp down unit, spigot unit, L**
Product no:	**HP20071078**
Product reference:	**Balder L**
Manufacturer:	Etac AS, www.etac.com
Revision:	**20.09.07**

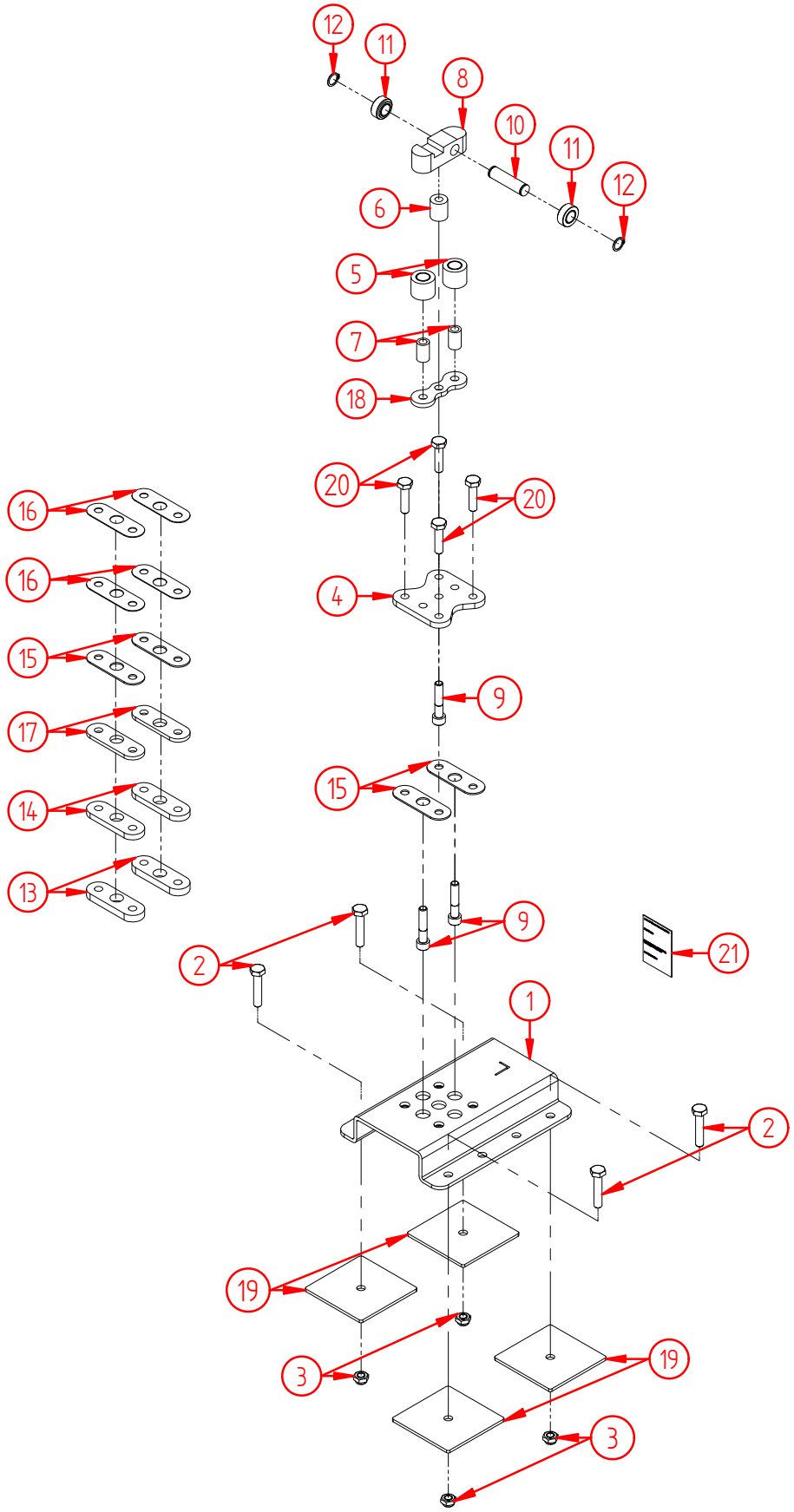

Product name:	**Clamp down unit, spigot unit, L**
Product no:	**HP20071078**
Product reference:	**Balder L**
Manufacturer:	Etac AS, www.etac.com
Revision:	**20.09.07**

Pos no.	Part no.	Qty	Description
1	4927	1	Main plate, spigot L
2	2748	4	Screw, hexagon M10x50 DIN 933 Elzink 8,8
3	1186	4	Nut, nylock M10 DIN 985 Elzink 8,8
4	1359	1	Intermediate plate, spigot F/L/J
5	1360	2	Steering wheel, spigot F/L/J
6	1333	1	Support lining, clamp down unit
7	1363	2	Sleeve for steering wheel, spigot F/L/J
8	1364	1	Reciever, lock hook, spigot F/L/J
9	4655	3	Screw, hexagon socket M10x50 DIN 912 Elzink 8,8
10	1362	1	Axle for main wheel, clamp down unit F/L/J
11	1361	2	Main wheel, spigot F/L/J
12	2562	2	Circlip Ø15, outside DIN 471 Unplated
13	11141	2	Spacer, 10mm, spigot F/L/J
14	11142	2	Spacer, 8mm, spigot F/L/J
15	11144	4	Spacer, 2mm, spigot F/L/J
16	11145	4	Spacer, 1mm, spigot F/L/J
17	11143	2	Spacer, 5mm, spigot F/L/J
18	11146	1	Spacer, steering wheel, spigot F/L/J
19	11147	4	Washer, 100x100mm - ø11mm
20	2728	4	Screw, hexagon M10x40 DIN 933 Elzink 8,8
21	11997	1	Label, Clamp down unit, spigot F/L/J

Part no.	Qty	Description
.	.	.
.	.	.
.	.	.
.	.	.

Product name:	**Clamp down unit, wheelchair unit for EZ-Lock**
Product no:	**HP20071079**
Product reference:	**Balder F/L**
Manufacturer:	Etac AS, www.etac.com
Revision:	**07.09.07**

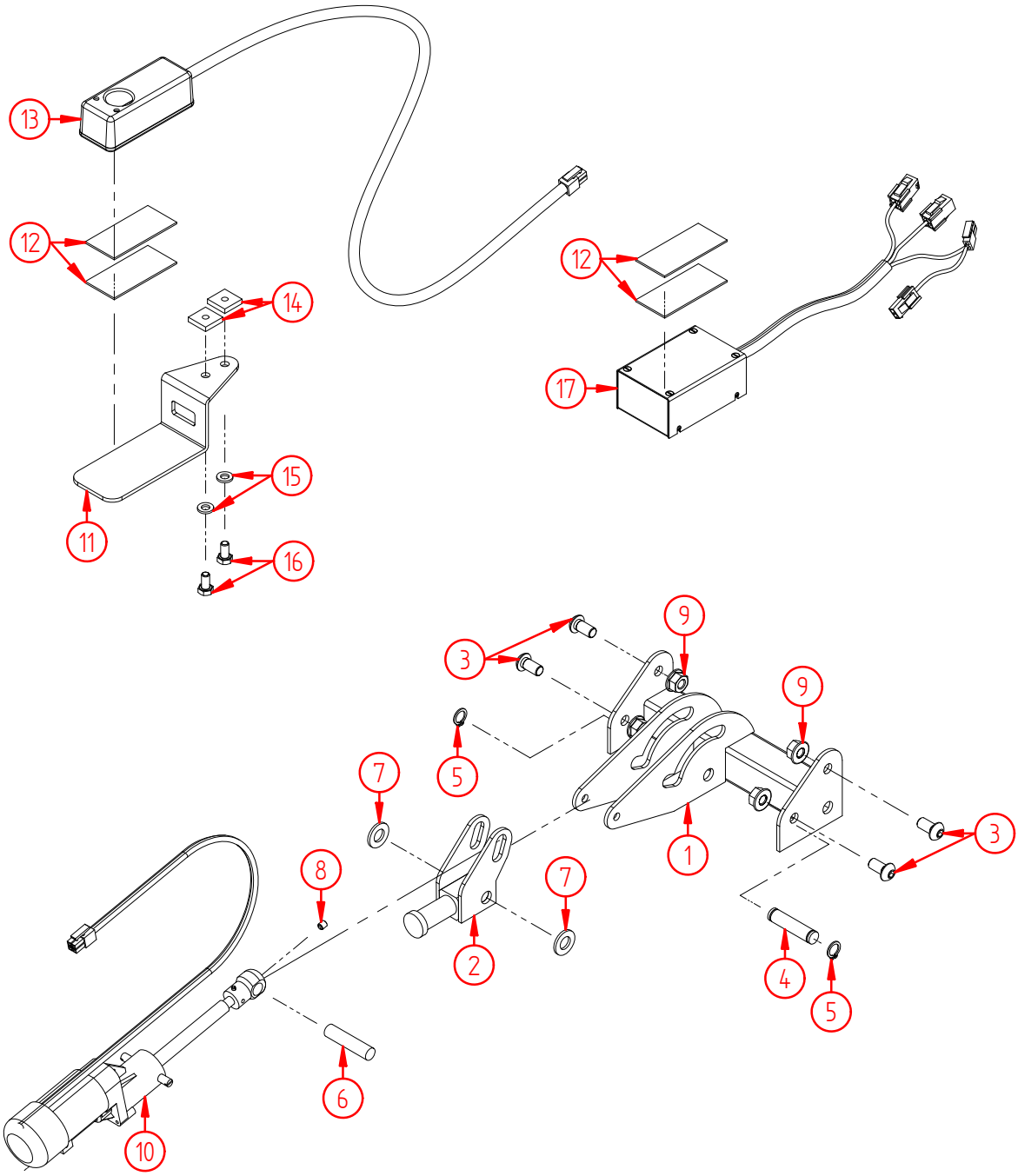

Product name:	**Clamp down unit, wheelchair unit for EZ-Lock**
Product no:	**HP20071079**
Product reference:	**Balder F/L**
Manufacturer:	Etac AS, www.etac.com
Revision:	**07.09.07**

Pos no.	Part no.	Qty	Description
1	4249	1	Main bracket for rev. clamp down
2	4248	1	Hook for rev. clamp down
3	1213	4	Screw, hexagon socket pan head M8x16 DIN 7380 Elzink 8,8
4	4247	1	Axle w/circlip slot for rev. clamp down
5	1153	2	Circlip Ø10, outside DIN 471 Unplated
6	4212	1	Axle without circlip slot for rev. clamp down unit
7	2981	2	Washer M10 DIN 125 Elzink
8	4423	1	Screw, hexagon set, M5x6 DIN 916 Unplated
9	1126	4	Nut, tensilock M8 DIN 6923 Goldfinish 8,8
10	10014	1	Actuator for rev. clamp down unit F/L/J
11	1356	1	Bracket, panel 35x90mm, front armrest F/L/J
12	1367	2	Velcro for fixation (L: 65mm)
13	1220018	1	El. switch panel
14	1276	2	Nut 18x18x4xM6, square, steel
15	1311	2	Washer M6 DIN 125 Elzink
16	1210	2	Screw, hexagon M6x12 DIN 933 Elzink 8,8
17	1220019	1	Electronics for rev. clamp down and sec. adapt.

Part no.	Qty	Description
.	.	.
.	.	.
.	.	.
.	.	.

Product name:	**Clamp down unit, undercarriage for car seat**
Product no:	**HP20071080**
Product reference:	**Balder F/L**
Manufacturer:	Etac AS, www.etac.com
Revision:	**01.01.07**

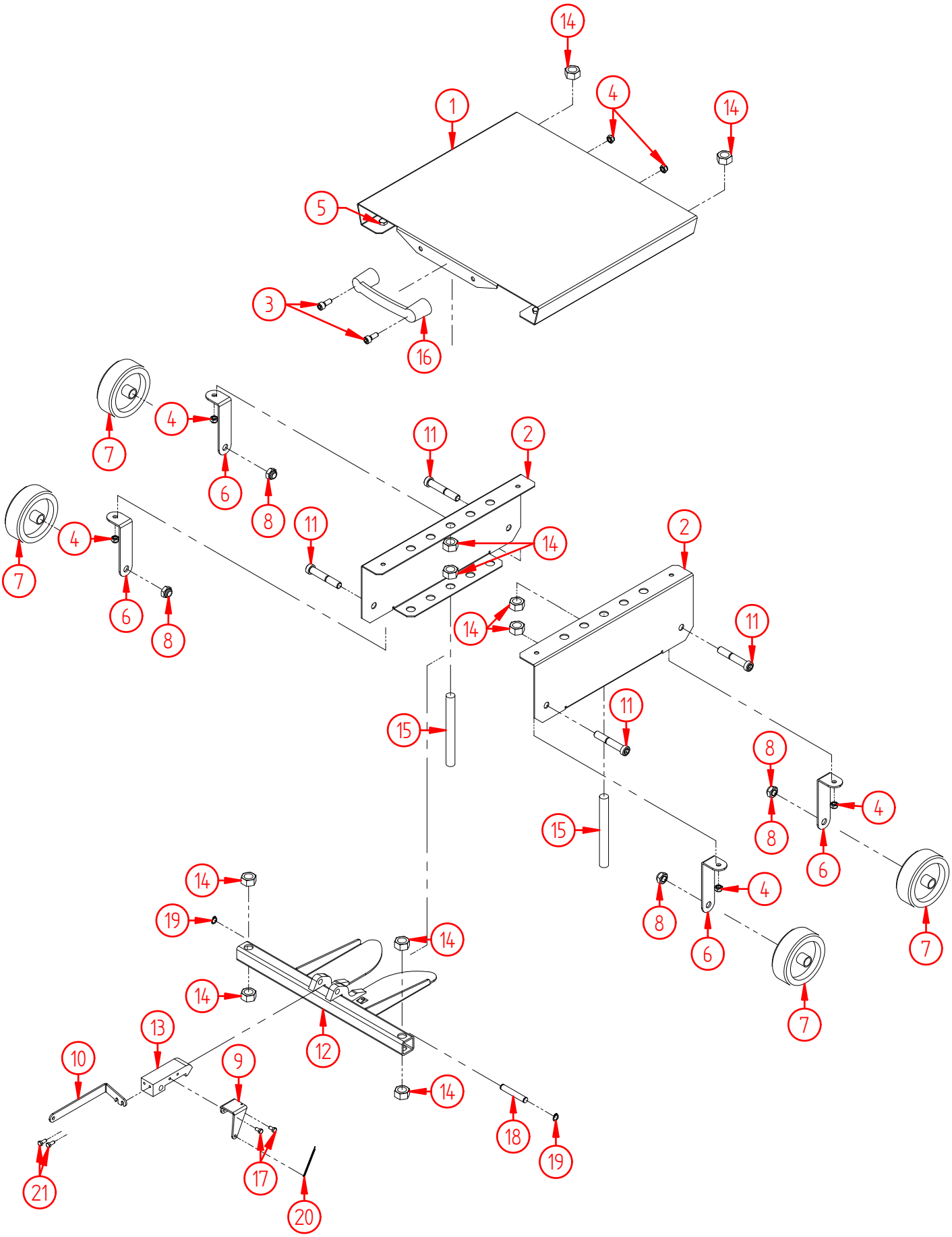

Product name:	**Clamp down unit, undercarriage for car seat**
Product no:	**HP20071080**
Product reference:	**Balder F/L**
Manufacturer:	Etac AS, www.etac.com
Revision:	**01.01.07**

Pos no.	Part no.	Qty	Description
1	4498	1	Seatplate, undercarriage
2	4500	2	Sideplate, undercarriage
3	10283	2	Screw, hexagon socket M8x20 DIN 912 Elzink 8,8
4	1070	6	Nut, nylock M8 DIN 985 El.zink 8,8
5	2777	4	Screw, hexagon headed M8x16 DIN 933 El.zink 8,8
6	4499	4	Wheelbracket, undercarriage
7	4502	4	Wheel, rubber gray, Ø100/44/Ø12/PIO
8	1047	4	Nut, nylock M12 DIN 985 El.zink 8,8
9	1372	1	Bracket for bar, clamp down unit F/L/J
10	11466	1	Release lever, undercarriage w/man. clamp down
11	2964	4	Screw, hexagon socket head cap M12x70 DIN 6912 Elzink 8,8
12	4196	1	Steering plate, universal, clamp down unit
13	9704	1	Lock hook, undercarriage
14	1441	10	Nut M16 DIN 934 El.zink 8,8
15	10928	2	Threaded bar M16 L:150mm
16	4501	1	Grip, pull handle, WN 130-132 M8
17	000641	2	Screw, hexagon M5x10 DIN 933 Elzink 8,8
18	1371	1	Axle for lock hook, clamp down unit
19	1153	2	Circlip Ø10, outside DIN 471 Unplated
20	1319	1	Spring, 0,75x10x40
21	2758	2	Screw, hexagon M5x12 DIN 933 Elzink 8,8

Part no.	Qty	Description
.	.	.
.	.	.
.	.	.
.	.	.

Product name:	**Tray, F/L, swingaside, small, right hand side**
Product no:	**HP20071081**
Product reference:	**Balder F/L**
Manufacturer:	Etac AS, www.etac.com
Revision:	**24.08.10**

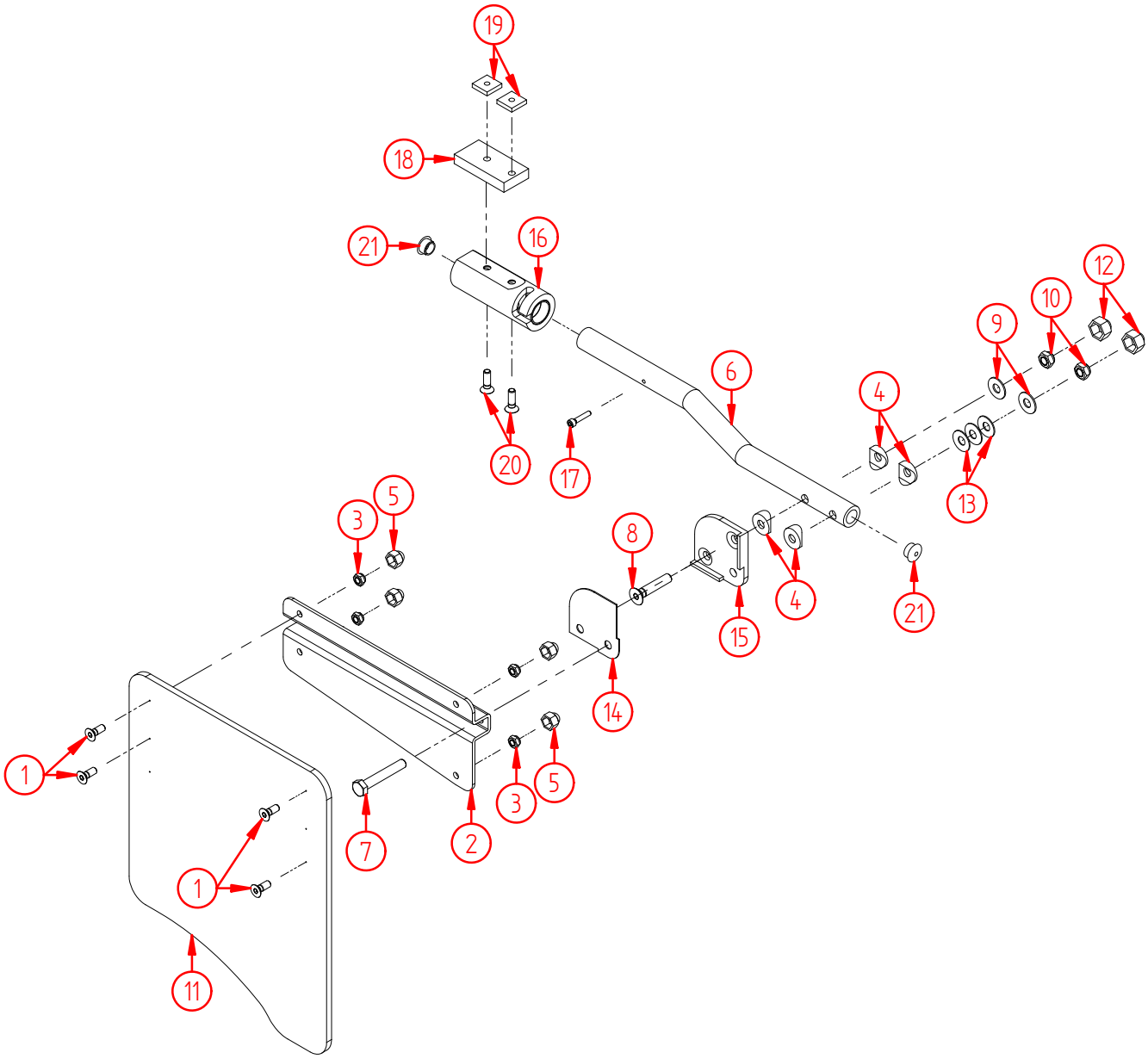

Product name:	**Tray, F/L, swingaside, small, right hand side**
Product no:	**HP20071081**
Product reference:	**Balder F/L**
Manufacturer:	Etac AS, www.etac.com
Revision:	**24.08.10**

Pos no.	Part no.	Qty	Description
1	1040	4	Screw, hexagon socket countersunk M6x16 DIN 7991 Elzink 8,8
2	10791	1	Bracket, tableplate, RH, W:230
3	1157	4	Nut, nylock M6 DIN 985 Elzink 8,8
4	9413	4	Washer w/radius
5	1192	4	Nut cover BK10 M6
6	9410	1	Bar, table aircrafttype, long
7	2782	1	Screw, hexagon headed M8x50 DIN 933 Elzink 8,8
8	4888	1	Screw, hexagon socket countersunk M8x10 DIN 7991 Elzink 8,8
9	1064	2	Washer M8x20 DIN 522 Elzink
10	1070	2	Nut, nylock M8 DIN 985 El.zink 8,8
11	9701	1	Sheet, table aircrafttype, 1/2 size, flat
12	3759	2	Nut cover BK13 M8
13	3750	3	Diskspring 20x8, 2x0,9
14	9409	1	Plasticwasher, table aircrafttype
15	9408	1	Gliding plate, table aircrafttype
16	9714	1	Bracket, right, table aircrafttype
17	9412	1	Screw, hexagon socket M4x20 DIN 912 Elzink 8,8
18	9406	1	Plate, bracket, table aircrafttype
19	1276	2	Nut 18x18x4xM6, square, steel
20	9345	2	Screw, hexagon socket countersunk M6x20 DIN 7991 Elzink 8,8
21	9962	2	Plate plug B17/13/7

Part no.	Qty	Description
.	.	.
.	.	.
.	.	.
.	.	.

Product name:	**Tray, F/L, swingaside, small, left hand side**
Product no:	**HP20071082**
Product reference:	**Balder F/L**
Manufacturer:	Etac AS, www.etac.com
Revision:	**24.08.10**

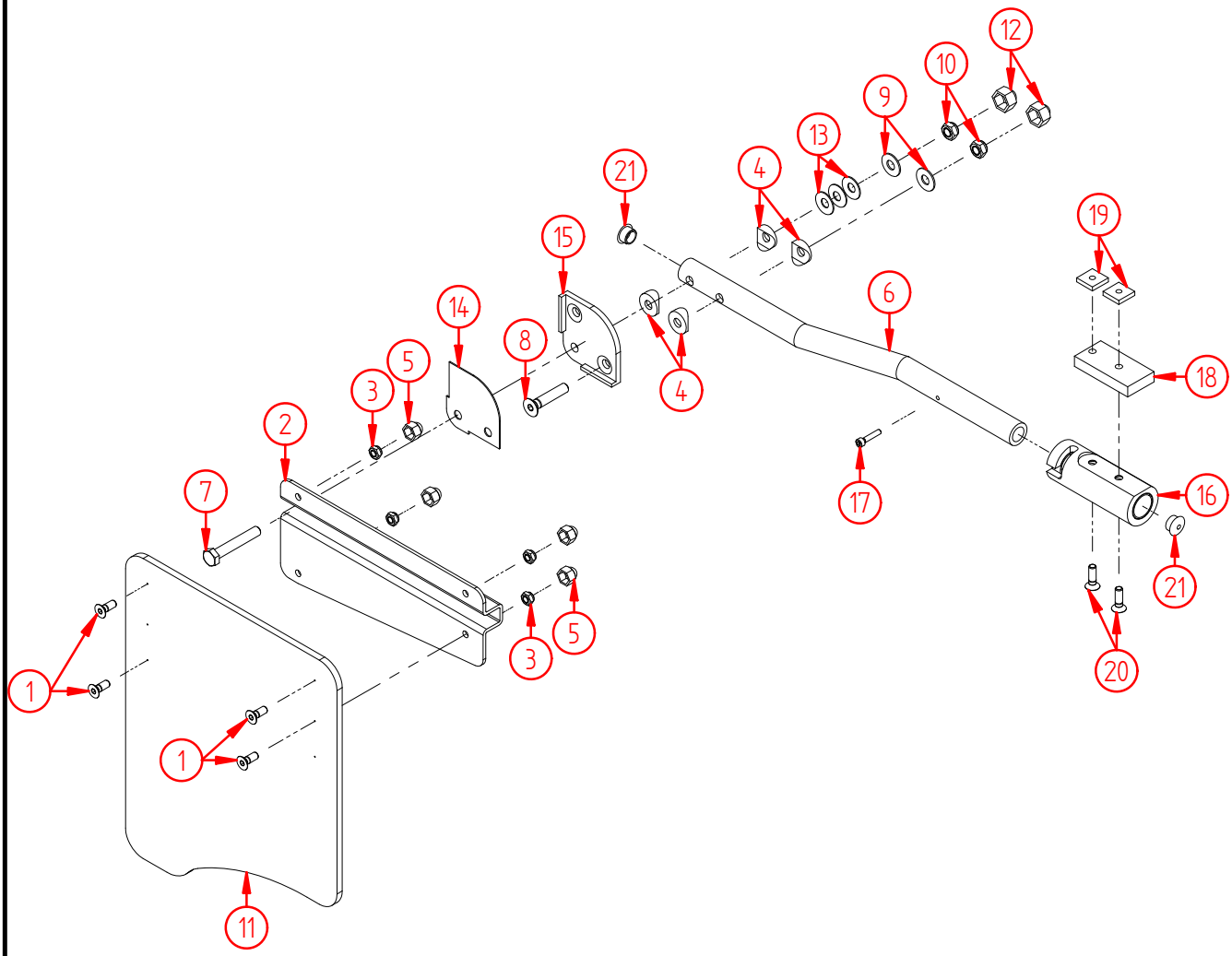

Product name:	**Tray, F/L, swingaside, small, left hand side**
Product no:	**HP20071082**
Product reference:	**Balder F/L**
Manufacturer:	Etac AS, www.etac.com
Revision:	**24.08.10**

Pos no.	Part no.	Qty	Description
1	1040	4	Screw, hexagon socket countersunk M6x16 DIN 7991 Elzink 8,8
2	10792	1	Bracket, tableplate, LH, W:230
3	1157	4	Nut, nylock M6 DIN 985 Elzink 8,8
4	9413	4	Washer w/radius
5	1192	4	Nut cover BK10 M6
6	9410	1	Bar, table aircrafttype, long
7	2782	1	Screw, hexagon headed M8x50 DIN 933 Elzink 8,8
8	4888	1	Screw, hexagon socket countersunk M8x10 DIN 7991 Elzink 8,8
9	1064	2	Washer M8x20 DIN 522 Elzink
10	1070	2	Nut, nylock M8 DIN 985 El.zink 8,8
11	9701	1	Sheet, table aircrafttype, 1/2 size, flat
12	3759	2	Nut cover BK13 M8
13	3750	3	Diskspring 20x8, 2x0,9
14	9409	1	Plasticwasher, table aircrafttype
15	9408	1	Gliding plate, table aircrafttype
16	9405	1	Bracket, left, table aircrafttype
17	9412	1	Screw, hexagon socket M4x20 DIN 912 Elzink 8,8
18	9406	1	Plate, bracket, table aircrafttype
19	1276	2	Nut 18x18x4xM6, square, steel
20	9345	2	Screw, hexagon socket countersunk M6x20 DIN 7991 Elzink 8,8
21	9962	2	Plate plug B17/13/7

Part no.	Qty	Description
.	.	.
.	.	.
.	.	.
.	.	.

Product name:	**Tray, F/L, swingaside, Comfort 1-2, right hand side**
Product no:	**HP20071083**
Product reference:	**Balder F/L**
Manufacturer:	Etac AS, www.etac.com
Revision:	**24.02.09**

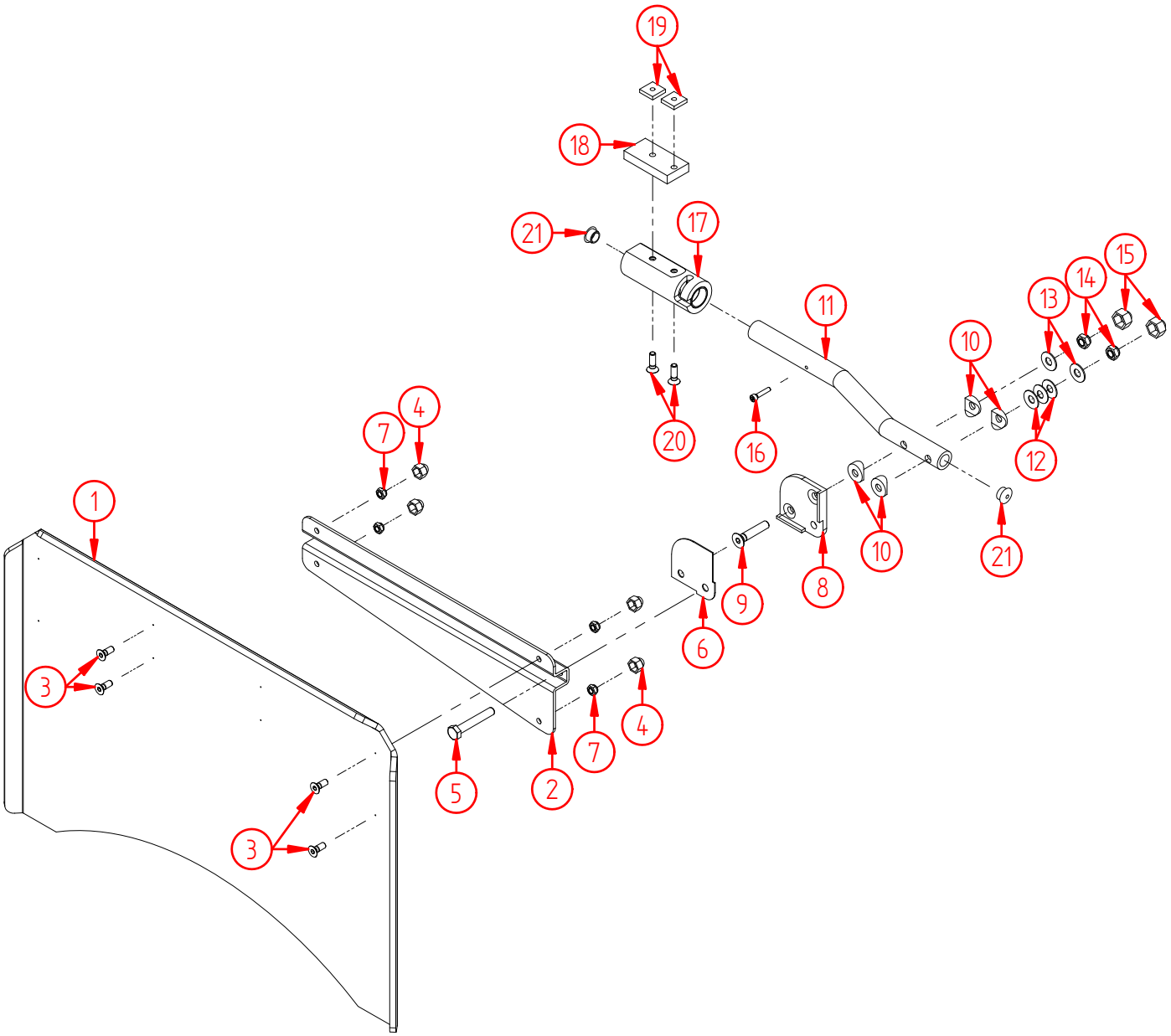

Product name:	**Tray, F/L, swingaside, Comfort 1-2, right hand side**
Product no:	**HP20071083**
Product reference:	**Balder F/L**
Manufacturer:	Etac AS, www.etac.com
Revision:	**24.02.09**

Pos no.	Part no.	Qty	Description
1	9965	1	Sheet for table aircrafttype Comf 1-2
2	9963	1	Bracket, tableplate, RH, W:350
3	1040	4	Screw, hexagon socket countersunk M6x16 DIN 7991 Elzink 8,8
4	1192	4	Nut cover BK10 M6
5	2782	1	Screw, hexagon headed M8x50 DIN 933 Elzink 8,8
6	9409	1	Plasticwasher, table aircrafttype
7	1157	4	Nut, nylock M6 DIN 985 Elzink 8,8
8	9408	1	Gliding plate, table aircrafttype
9	4888	1	Screw, hexagon socket countersunk M8x10 DIN 7991 Elzink 8,8
10	9413	4	Washer w/radius
11	9967	1	Bar, table aircrafttype, short
12	3750	3	Diskspring 20x8, 2x0,9
13	1064	2	Washer M8x20 DIN 522 Elzink
14	1070	2	Nut, nylock M8 DIN 985 El.zink 8,8
15	3759	2	Nut cover BK13 M8
16	9412	1	Screw, hexagon socket M4x20 DIN 912 Elzink 8,8
17	9714	1	Bracket, right, table aircrafttype
18	9406	1	Plate, bracket, table aircrafttype
19	1276	2	Nut 18x18x4xM6, square, steel
20	9345	2	Screw, hexagon socket countersunk M6x20 DIN 7991 Elzink 8,8
21	9962	2	Plate plug B17/13/7

Part no.	Qty	Description
.	.	.
.	.	.
.	.	.
.	.	.

Product name:	**Tray, F/L, swingaside, Comfort 1-2, left hand side**
Product no:	**HP20071084**
Product reference:	**Balder F/L**
Manufacturer:	Etac AS, www.etac.com
Revision:	**01.01.07**

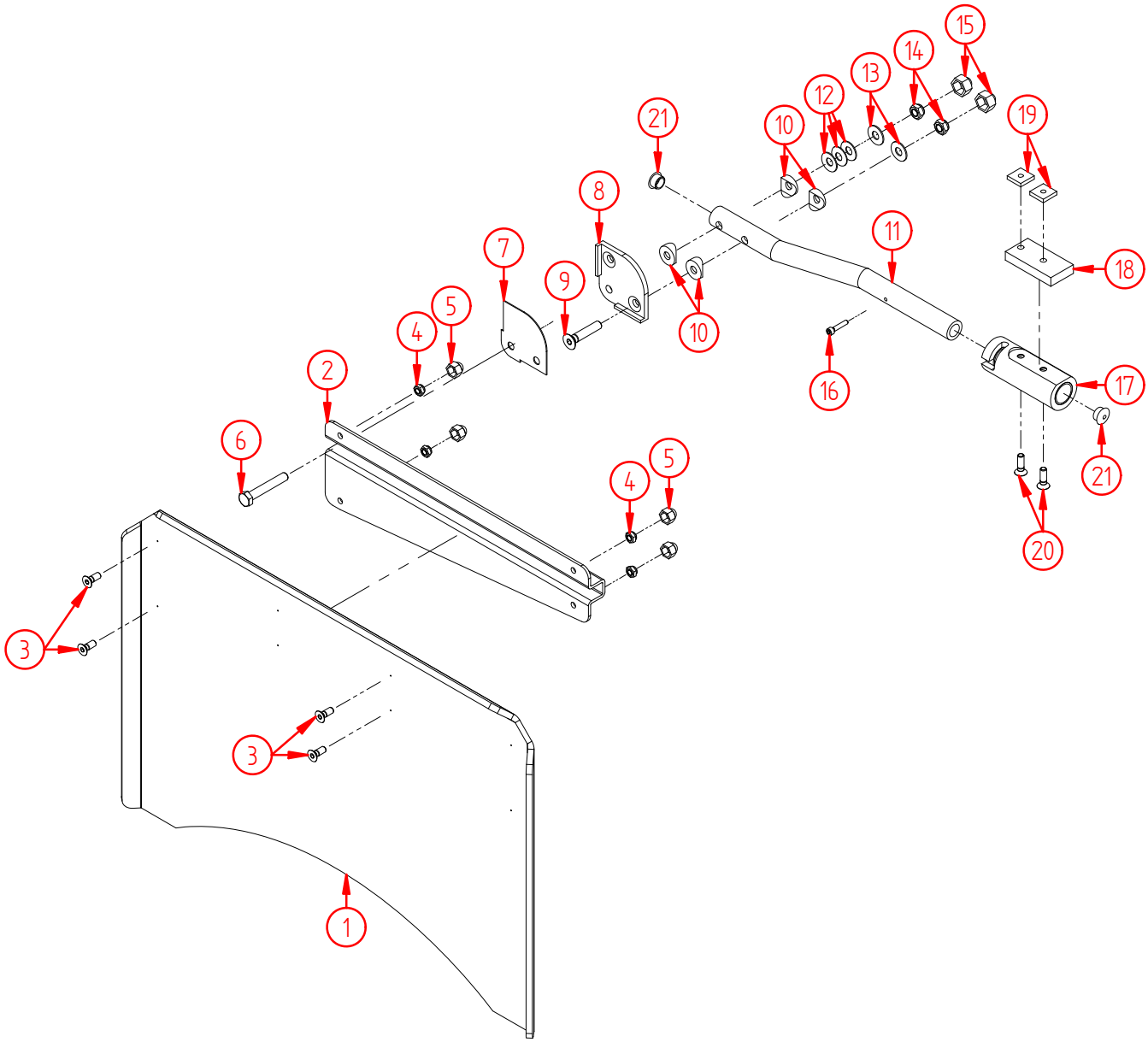

Product name:	**Tray, F/L, swingaside, Comfort 1-2, left hand side**
Product no:	**HP20071084**
Product reference:	**Balder F/L**
Manufacturer:	Etac AS, www.etac.com
Revision:	**01.01.07**

Pos no.	Part no.	Qty	Description
1	9965	1	Sheet for table aircrafttype Comf 1-2
2	9700	1	Bracket, tableplate, LH, W:350
3	1040	4	Screw, hexagon socket countersunk M6x16 DIN 7991 Elzink 8,8
4	1157	4	Nut, nylock M6 DIN 985 Elzink 8,8
5	1192	4	Nut cover BK10 M6
6	2782	1	Screw, hexagon headed M8x50 DIN 933 Elzink 8,8
7	9409	1	Plasticwasher, table aircrafttype
8	9408	1	Gliding plate, table aircrafttype
9	4888	1	Screw, hexagon socket countersunk M8x10 DIN 7991 Elzink 8,8
10	9413	4	Washer w/radius
11	9967	1	Bar, table aircrafttype, short
12	3750	3	Diskspring 20x8, 2x0,9
13	1064	2	Washer M8x20 DIN 522 Elzink
14	1070	2	Nut, nylock M8 DIN 985 El.zink 8,8
15	3759	2	Nut cover BK13 M8
16	9412	1	Screw, hexagon socket M4x20 DIN 912 Elzink 8,8
17	9405	1	Bracket, left, table aircrafttype
18	9406	1	Plate, bracket, table aircrafttype
19	1276	2	Nut 18x18x4xM6, square, steel
20	9345	2	Screw, hexagon socket countersunk M6x20 DIN 7991 Elzink 8,8
21	9962	2	Plate plug B17/13/7

Part no.	Qty	Description
.	.	.
.	.	.
.	.	.
.	.	.

Product name:	**Tray, F/L, swingaside, Comfort 3-4, right hand side**
Product no:	**HP20071085**
Product reference:	**Balder F/L**
Manufacturer:	Etac AS, www.etac.com
Revision:	**24.02.09**

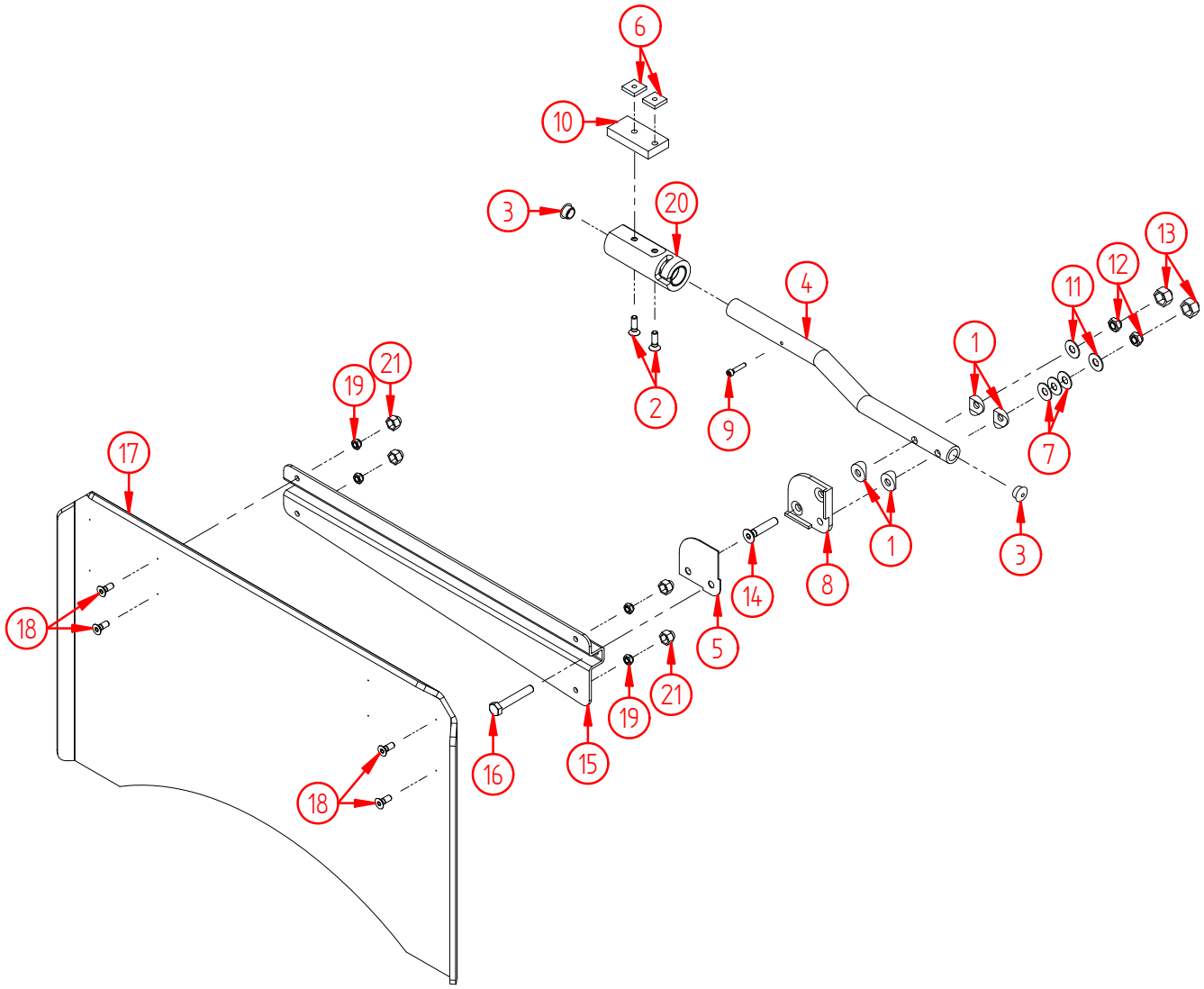

Product name:	**Tray, F/L, swingaside, Comfort 3-4, right hand side**
Product no:	**HP20071085**
Product reference:	**Balder F/L**
Manufacturer:	Etac AS, www.etac.com
Revision:	**24.02.09**

Pos no.	Part no.	Qty	Description
1	9413	4	Washer w/radius
2	9345	2	Screw, hexagon socket countersunk M6x20 DIN 7991 Elzink 8,8
3	9962	2	Plate plug B17/13/7
4	9410	1	Bar, table aircrafttype, long
5	9409	1	Plasticwasher, table aircrafttype
6	1276	2	Nut 18x18x4xM6, square, steel
7	3750	3	Diskspring 20x8, 2x0,9
8	9408	1	Gliding plate, table aircrafttype
9	9412	1	Screw, hexagon socket M4x20 DIN 912 Elzink 8,8
10	9406	1	Plate, bracket, table aircrafttype
11	1064	2	Washer M8x20 DIN 522 Elzink
12	1070	2	Nut, nylock M8 DIN 985 El.zink 8,8
13	3759	2	Nut cover BK13 M8
14	4888	1	Screw, hexagon socket countersunk M8x10 DIN 7991 Elzink 8,8
15	9966	1	Bracket, tableplate, RH, W:450
16	2782	1	Screw, hexagon headed M8x50 DIN 933 Elzink 8,8
17	9404	1	Sheet for table aircrafttype (Comf 3-4)
18	1040	4	Screw, hexagon socket countersunk M6x16 DIN 7991 Elzink 8,8
19	1157	4	Nut, nylock M6 DIN 985 Elzink 8,8
20	9714	1	Bracket, right, table aircrafttype
21	1192	4	Nut cover BK10 M6

Part no.	Qty	Description
.	.	.
.	.	.
.	.	.
.	.	.

Product name:	**Tray, F/L, swingaside, Comfort 3-4, left hand side**
Product no:	**HP20071086**
Product reference:	**Balder F/L**
Manufacturer:	Etac AS, www.etac.com
Revision:	**01.01.07**

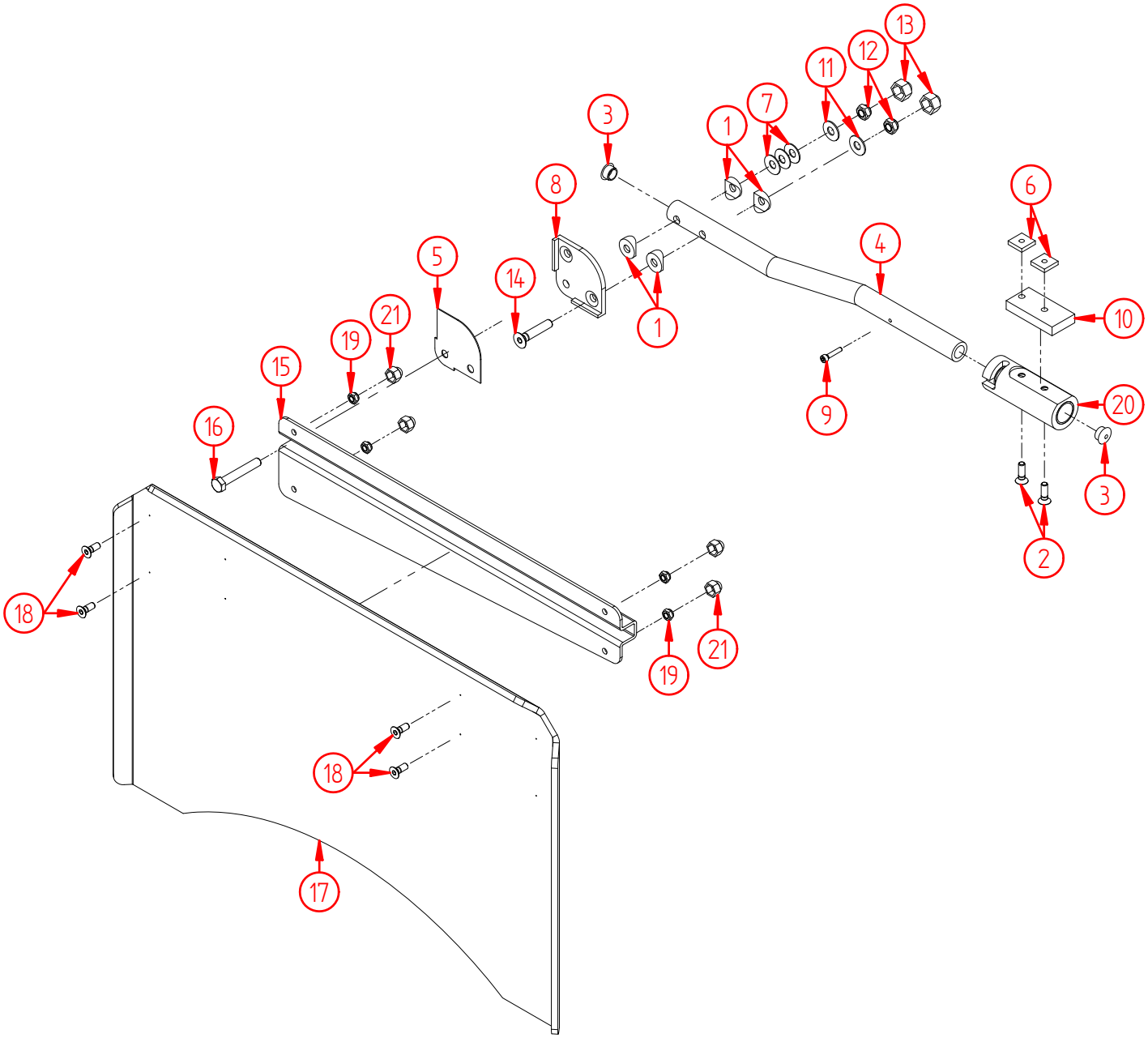

Product name:	**Tray, F/L, swingaside, Comfort 3-4, left hand side**
Product no:	**HP20071086**
Product reference:	**Balder F/L**
Manufacturer:	Etac AS, www.etac.com
Revision:	**01.01.07**

Pos no.	Part no.	Qty	Description
1	9413	4	Washer w/radius
2	9345	2	Screw, hexagon socket countersunk M6x20 DIN 7991 Elzink 8,8
3	9962	2	Plate plug B17/13/7
4	9410	1	Bar, table aircrafttype, long
5	9409	1	Plasticwasher, table aircrafttype
6	1276	2	Nut 18x18x4xM6, square, steel
7	3750	3	Diskspring 20x8, 2x0,9
8	9408	1	Gliding plate, table aircrafttype
9	9412	1	Screw, hexagon socket M4x20 DIN 912 Elzink 8,8
10	9406	1	Plate, bracket, table aircrafttype
11	1064	2	Washer M8x20 DIN 522 Elzink
12	1070	2	Nut, nylock M8 DIN 985 El.zink 8,8
13	3759	2	Nut cover BK13 M8
14	4888	1	Screw, hexagon socket countersunk M8x10 DIN 7991 Elzink 8,8
15	9407	1	Bracket, tableplate, LH, W:450
16	2782	1	Screw, hexagon headed M8x50 DIN 933 Elzink 8,8
17	9404	1	Sheet for table aircrafttype (Comf 3-4)
18	1040	4	Screw, hexagon socket countersunk M6x16 DIN 7991 Elzink 8,8
19	1157	4	Nut, nylock M6 DIN 985 Elzink 8,8
20	9405	1	Bracket, left, table aircrafttype
21	1192	4	Nut cover BK10 M6

Part no.	Qty	Description
.	.	.
.	.	.
.	.	.
.	.	.

Product name:	**Tray, F/L, swingaside, Comfort 5-6, right hand side**
Product no:	**HP20071087**
Product reference:	**Balder F/L**
Manufacturer:	Etac AS, www.etac.com
Revision:	**24.02.09**

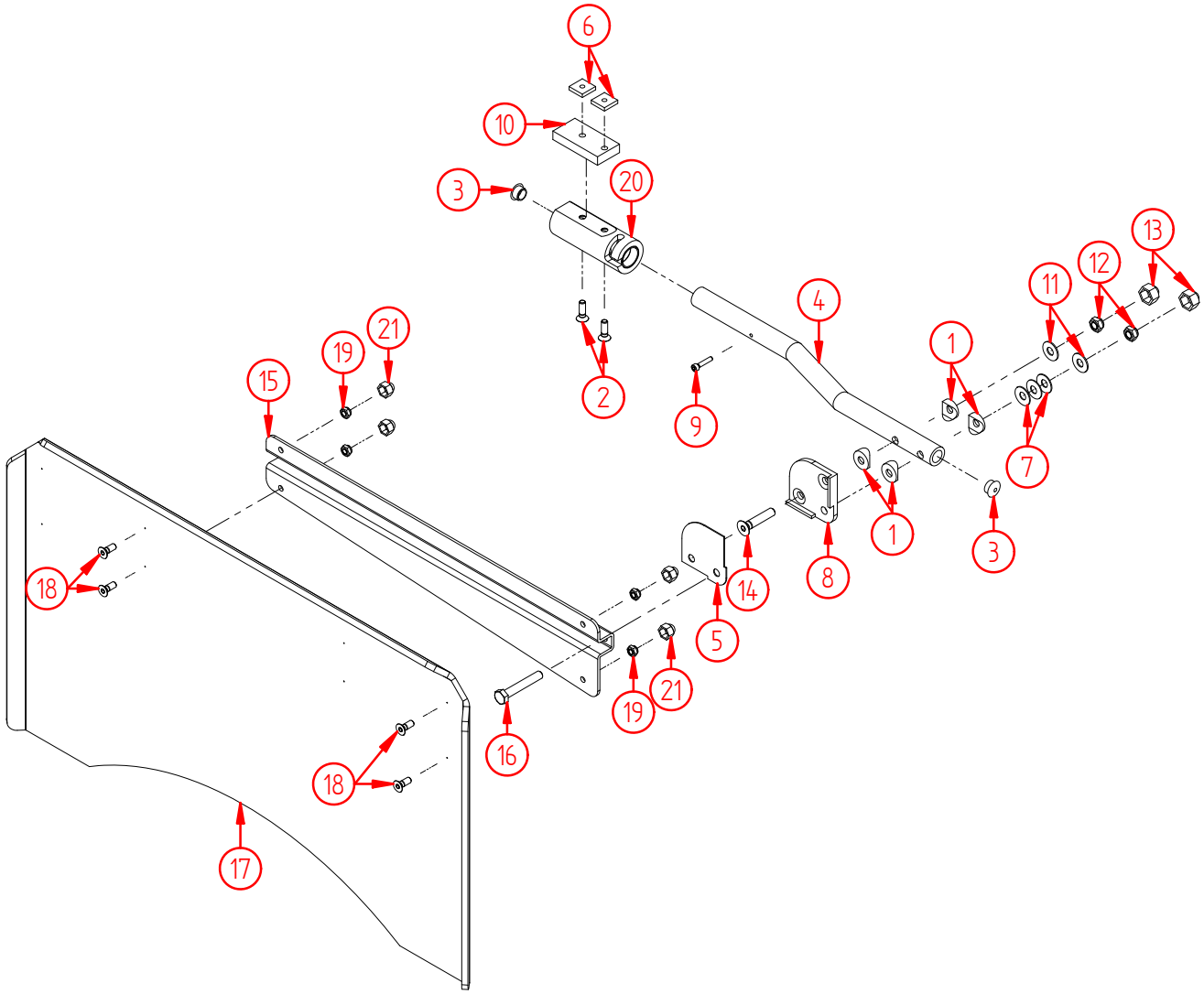

Product name:	**Tray, F/L, swingaside, Comfort 5-6, right hand side**
Product no:	**HP20071087**
Product reference:	**Balder F/L**
Manufacturer:	Etac AS, www.etac.com
Revision:	**24.02.09**

Pos no.	Part no.	Qty	Description
1	9413	4	Washer w/radius
2	9345	2	Screw, hexagon socket countersunk M6x20 DIN 7991 Elzink 8,8
3	9962	2	Plate plug B17/13/7
4	9410	1	Bar, table aircrafttype, long
5	9409	1	Plasticwasher, table aircrafttype
6	1276	2	Nut 18x18x4xM6, square, steel
7	3750	3	Diskspring 20x8, 2x0,9
8	9408	1	Gliding plate, table aircrafttype
9	9412	1	Screw, hexagon socket M4x20 DIN 912 Elzink 8,8
10	9406	1	Plate, bracket, table aircrafttype
11	1064	2	Washer M8x20 DIN 522 Elzink
12	1070	2	Nut, nylock M8 DIN 985 El.zink 8,8
13	3759	2	Nut cover BK13 M8
14	4888	1	Screw, hexagon socket countersunk M8x10 DIN 7991 Elzink 8,8
15	9966	1	Bracket, tableplate, RH, W:450
16	2782	1	Screw, hexagon headed M8x50 DIN 933 Elzink 8,8
17	9964	1	Sheet for table aircrafttype, Comf 5-6
18	1040	4	Screw, hexagon socket countersunk M6x16 DIN 7991 Elzink 8,8
19	1157	4	Nut, nylock M6 DIN 985 Elzink 8,8
20	9714	1	Bracket, right, table aircrafttype
21	1192	4	Nut cover BK10 M6

Part no.	Qty	Description
.	.	.
.	.	.
.	.	.
.	.	.

Product name:	**Tray, F/L, swingaside, Comfort 5-6, left hand side**
Product no:	**HP20071088**
Product reference:	**Balder F/L**
Manufacturer:	Etac AS, www.etac.com
Revision:	**01.01.07**

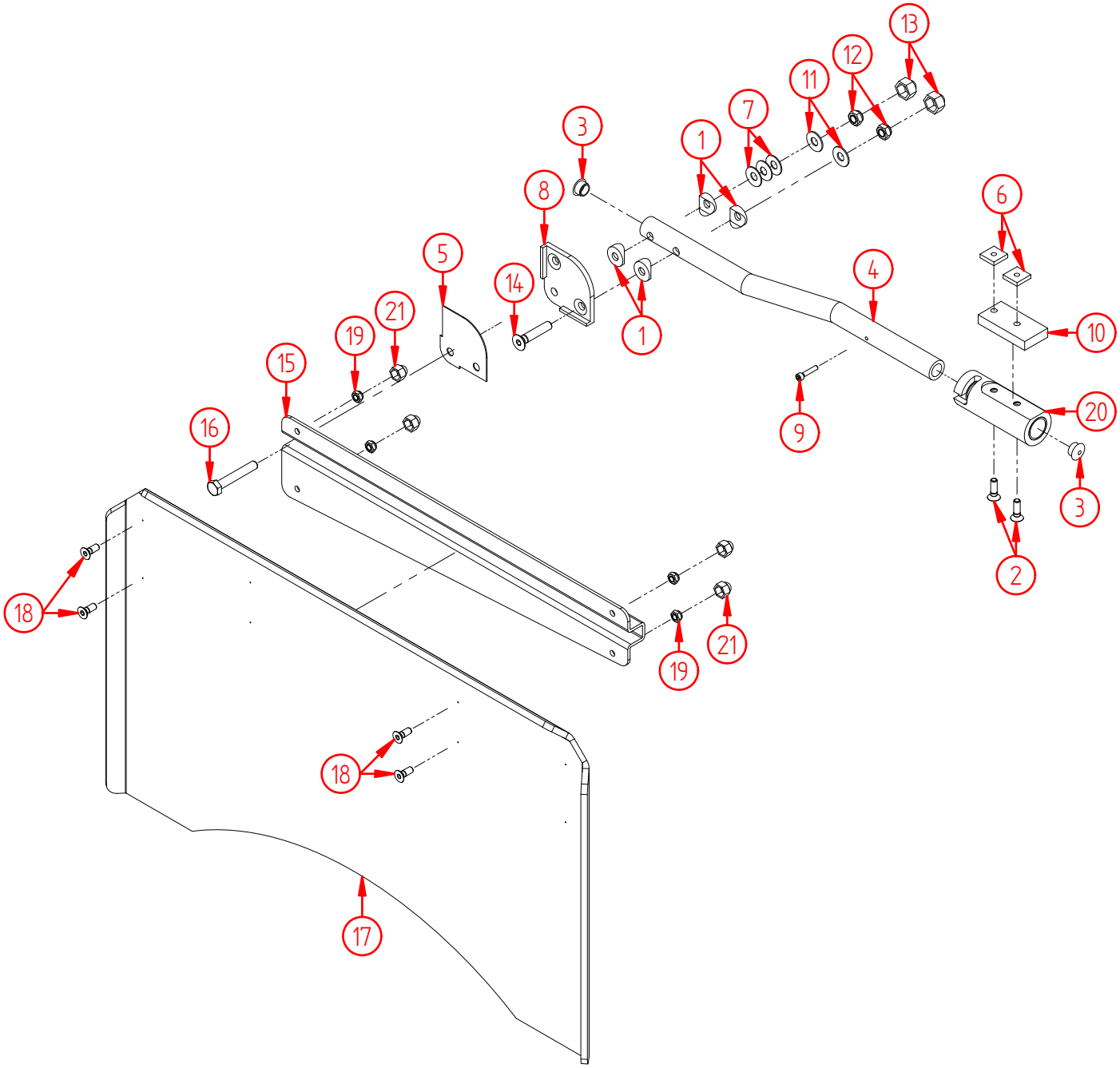

Product name:	**Tray, F/L, swingaside, Comfort 5-6, left hand side**
Product no:	**HP20071088**
Product reference:	**Balder F/L**
Manufacturer:	Etac AS, www.etac.com
Revision:	**01.01.07**

Pos no.	Part no.	Qty	Description
1	9413	4	Washer w/radius
2	9345	2	Screw, hexagon socket countersunk M6x20 DIN 7991 Elzink 8,8
3	9962	2	Plate plug B17/13/7
4	9410	1	Bar, table aircrafttype, long
5	9409	1	Plasticwasher, table aircrafttype
6	1276	2	Nut 18x18x4xM6, square, steel
7	3750	3	Diskspring 20x8, 2x0,9
8	9408	1	Gliding plate, table aircrafttype
9	9412	1	Screw, hexagon socket M4x20 DIN 912 Elzink 8,8
10	9406	1	Plate, bracket, table aircrafttype
11	1064	2	Washer M8x20 DIN 522 Elzink
12	1070	2	Nut, nylock M8 DIN 985 El.zink 8,8
13	3759	2	Nut cover BK13 M8
14	4888	1	Screw, hexagon socket countersunk M8x10 DIN 7991 Elzink 8,8
15	9407	1	Bracket, tableplate, LH, W:450
16	2782	1	Screw, hexagon headed M8x50 DIN 933 Elzink 8,8
17	9964	1	Sheet for table aircrafttype, Comf 5-6
18	1040	4	Screw, hexagon socket countersunk M6x16 DIN 7991 Elzink 8,8
19	1157	4	Nut, nylock M6 DIN 985 Elzink 8,8
20	9405	1	Bracket, left, table aircrafttype
21	1192	4	Nut cover BK10 M6

Part no.	Qty	Description
.	.	.
.	.	.
.	.	.
.	.	.

Product name:	**Tray, swingaside, Junior, right hand side**
Product no:	**HP20071089**
Product reference:	**Balder J**
Manufacturer:	Etac AS, www.etac.com
Revision:	**24.02.09**

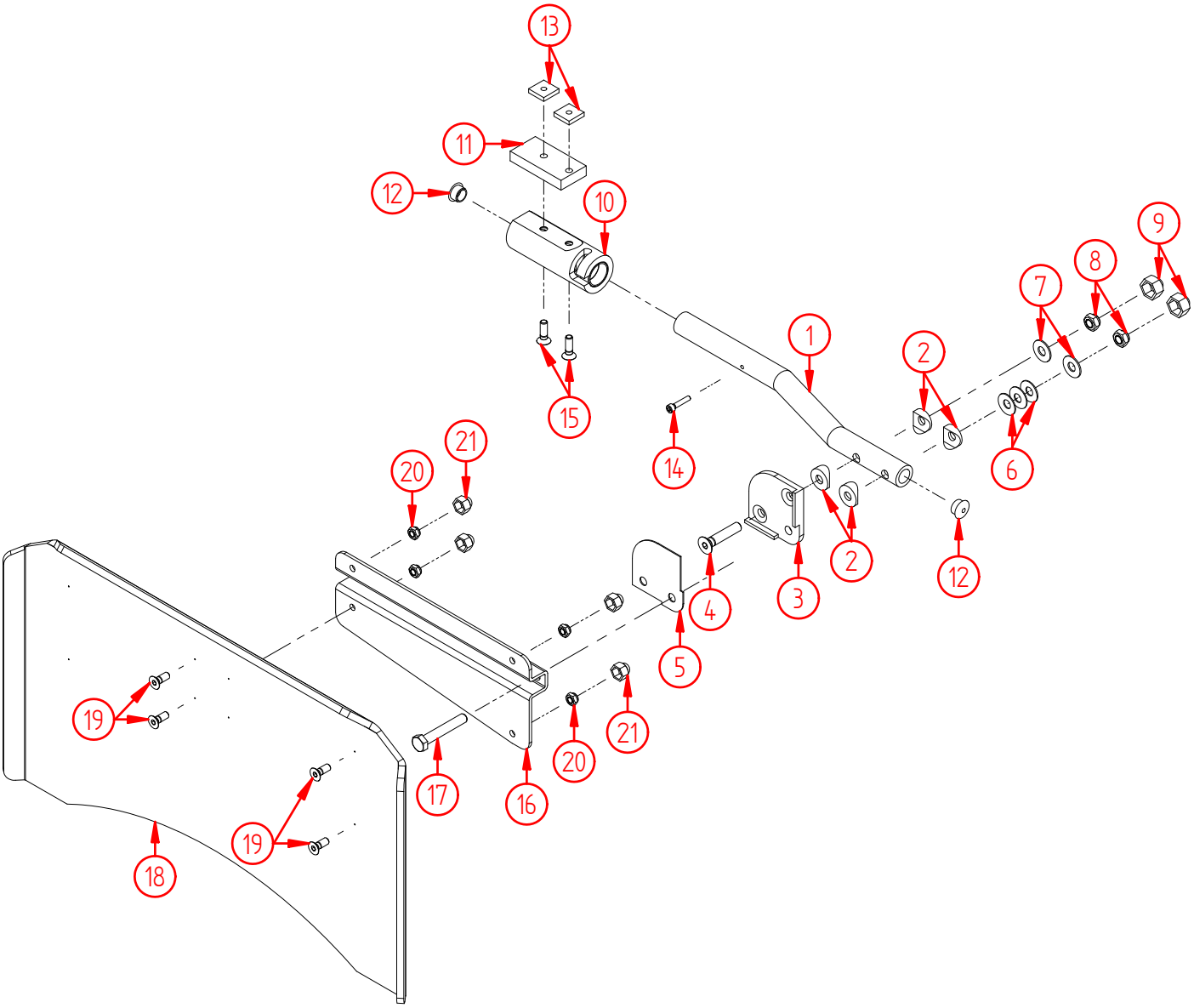

Product name:	**Tray, swingaside, Junior, right hand side**
Product no:	**HP20071089**
Product reference:	**Balder J**
Manufacturer:	Etac AS, www.etac.com
Revision:	**24.02.09**

Pos no.	Part no.	Qty	Description
1	9967	1	Bar, table aircrafttype, short
2	9413	4	Washer w/radius
3	9408	1	Gliding plate, table aircrafttype
4	4888	1	Screw, hexagon socket countersunk M8x10 DIN 7991 Elzink 8,8
5	9409	1	Plasticwasher, table aircrafttype
6	3750	3	Diskspring 20x8, 2x0,9
7	1064	2	Washer M8x20 DIN 522 Elzink
8	1070	2	Nut, nylock M8 DIN 985 El.zink 8,8
9	3759	2	Nut cover BK13 M8
10	9714	1	Bracket, right, table aircrafttype
11	9406	1	Plate, bracket, table aircrafttype
12	9962	2	Plate plug B17/13/7
13	1276	2	Nut 18x18x4xM6, square, steel
14	9412	1	Screw, hexagon socket M4x20 DIN 912 Elzink 8,8
15	9345	2	Screw, hexagon socket countersunk M6x20 DIN 7991 Elzink 8,8
16	10791	1	Bracket, tableplate, RH, W:230
17	2782	1	Screw, hexagon headed M8x50 DIN 933 Elzink 8,8
18	10104	1	Sheet for table aircrafttype, Junior
19	1040	4	Screw, hexagon socket countersunk M6x16 DIN 7991 Elzink 8,8
20	1157	4	Nut, nylock M6 DIN 985 Elzink 8,8
21	1192	4	Nut cover BK10 M6

Part no.	Qty	Description
.	.	.
.	.	.
.	.	.
.	.	.

Product name:	**Tray, swingaside, Junior, left hand side**
Product no:	**HP20071090**
Product reference:	**Balder J**
Manufacturer:	Etac AS, www.etac.com
Revision:	**01.01.07**

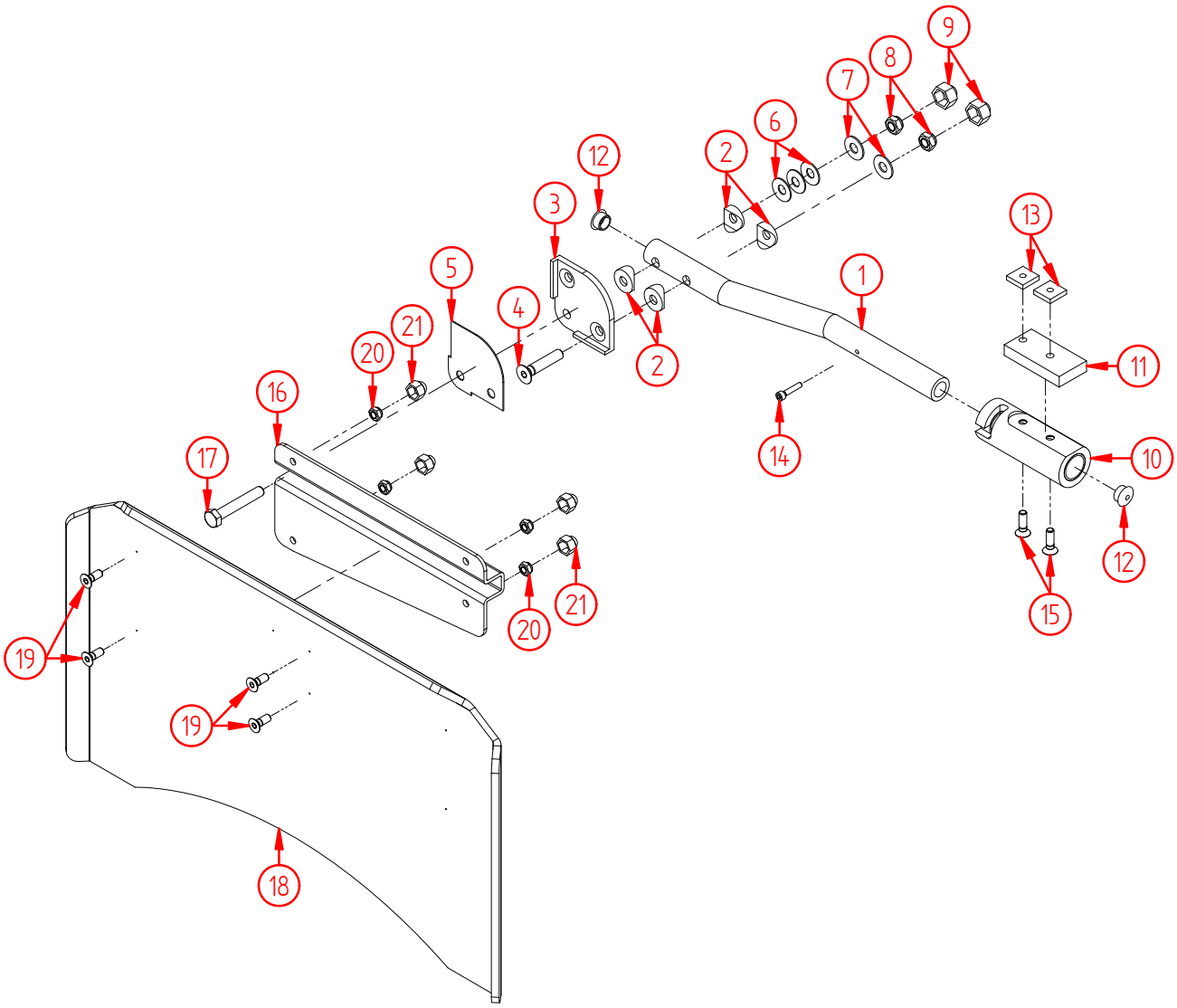

Product name:	**Tray, swingaside, Junior, left hand side**
Product no:	**HP20071090**
Product reference:	**Balder J**
Manufacturer:	Etac AS, www.etac.com
Revision:	**01.01.07**

Pos no.	Part no.	Qty	Description
1	9967	1	Bar, table aircrafttype, short
2	9413	4	Washer w/radius
3	9408	1	Gliding plate, table aircrafttype
4	4888	1	Screw, hexagon socket countersunk M8x10 DIN 7991 Elzink 8,8
5	9409	1	Plasticwasher, table aircrafttype
6	3750	3	Diskspring 20x8, 2x0,9
7	1064	2	Washer M8x20 DIN 522 Elzink
8	1070	2	Nut, nylock M8 DIN 985 El.zink 8,8
9	3759	2	Nut cover BK13 M8
10	9405	1	Bracket, left, table aircrafttype
11	9406	1	Plate, bracket, table aircrafttype
12	9962	2	Plate plug B17/13/7
13	1276	2	Nut 18x18x4xM6, square, steel
14	9412	1	Screw, hexagon socket M4x20 DIN 912 Elzink 8,8
15	9345	2	Screw, hexagon socket countersunk M6x20 DIN 7991 Elzink 8,8
16	10792	1	Bracket, tableplate, LH, W:230
17	2782	1	Screw, hexagon headed M8x50 DIN 933 Elzink 8,8
18	10104	1	Sheet for table aircrafttype, Junior
19	1040	4	Screw, hexagon socket countersunk M6x16 DIN 7991 Elzink 8,8
20	1157	4	Nut, nylock M6 DIN 985 Elzink 8,8
21	1192	4	Nut cover BK10 M6

Part no.	Qty	Description
.	.	.
.	.	.
.	.	.
.	.	.

Product name:	**Crutch fitting, under armrests 1 crutch**
Product no:	**HP20071091**
Product reference:	**Balder F/L**
Manufacturer:	Etac AS, www.etac.com
Revision:	**01.01.07**

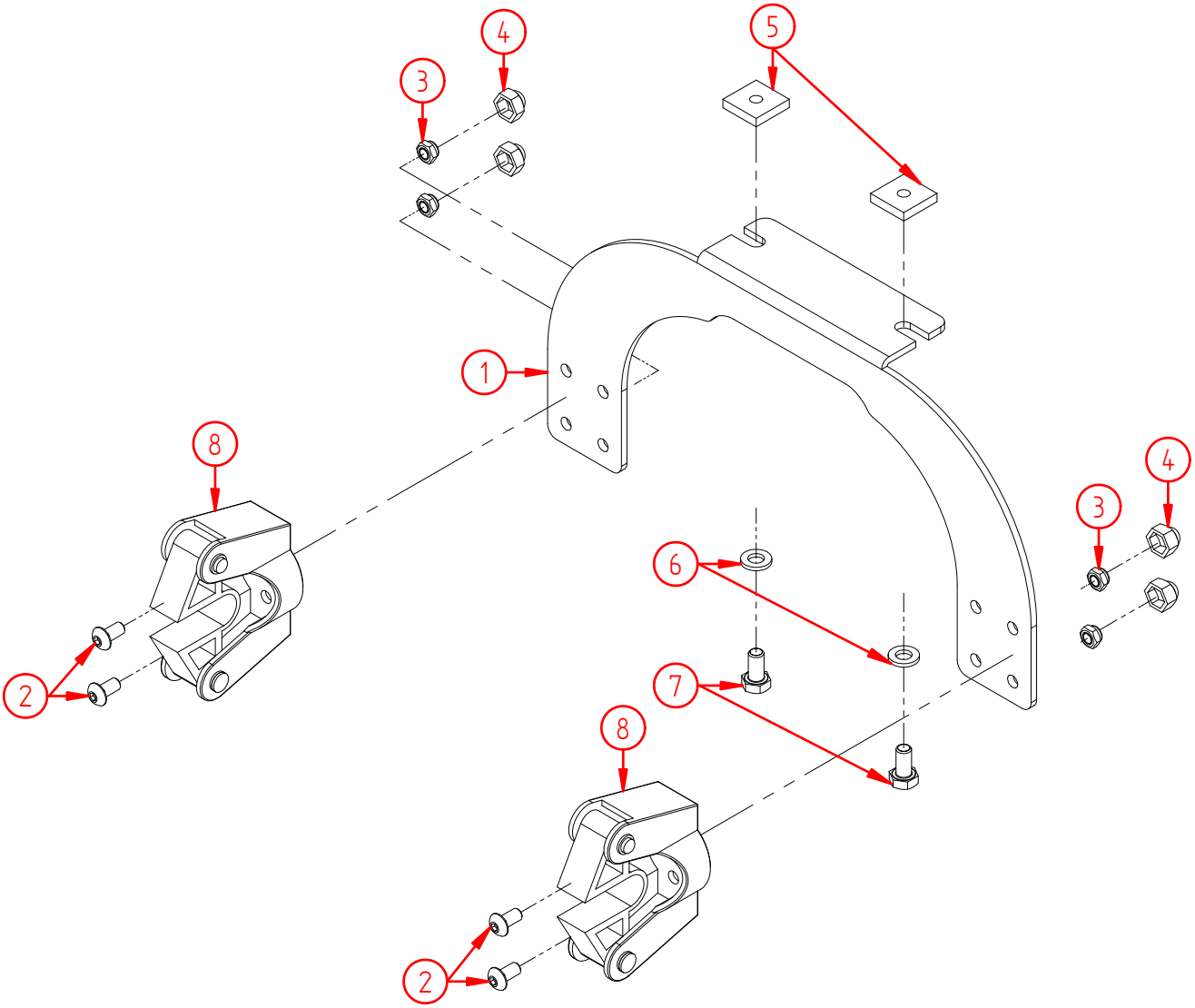

Product name:	**Crutch fitting, under armrests 1 crutch**
Product no:	**HP20071091**
Product reference:	**Balder F/L**
Manufacturer:	Etac AS, www.etac.com
Revision:	**01.01.07**

Pos no.	Part no.	Qty	Description
1	4274	1	Bracket, crutch fitting under the armrest L/R
2	4402	4	Screw, hexagon socket pan head M5x10 ISO 7380 Elzink 10,9
3	1190	4	Nut, nylock M5 DIN 985 Elzink 8,8
4	1191	4	Nut cover BK8 M5
5	1276	2	Nut 18x18x4xM6, square, steel
6	1311	2	Washer M6 DIN 125 Elzink
7	1210	2	Screw, hexagon M6x12 DIN 933 Elzink 8,8
8	000326	2	Crutch fitting, universal

Part no.	Qty	Description
.	.	.
.	.	.
.	.	.
.	.	.

Product name:	**Crutch fitting, under armrests 2 crutch**
Product no:	**HP20071092**
Product reference:	**Balder F/L**
Manufacturer:	Etac AS, www.etac.com
Revision:	**01.01.07**

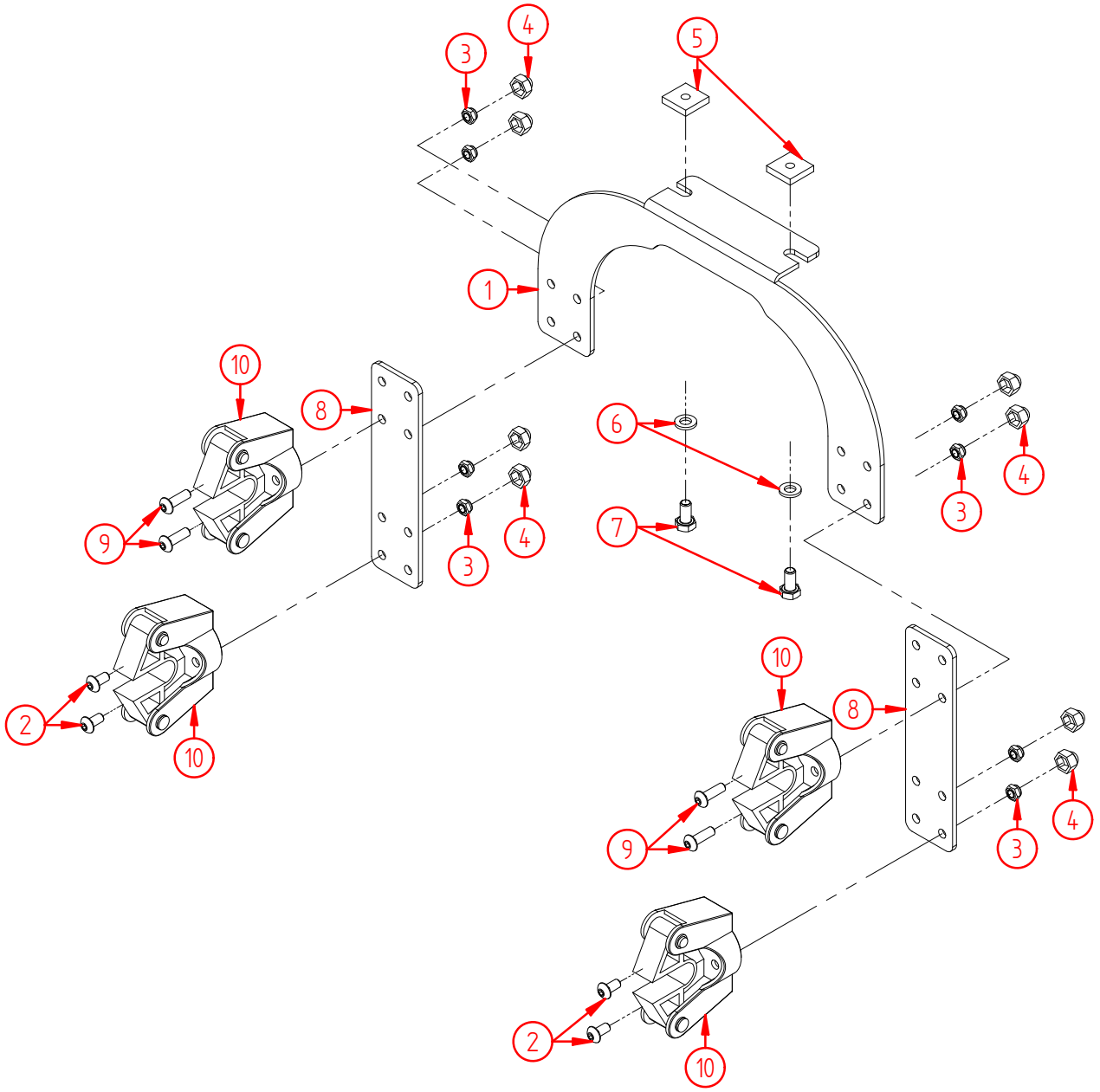

Product name:	**Crutch fitting, under armrests 2 crutch**
Product no:	**HP20071092**
Product reference:	**Balder F/L**
Manufacturer:	Etac AS, www.etac.com
Revision:	**01.01.07**

Pos no.	Part no.	Qty	Description
1	4274	1	Bracket, crutch fitting under the armrest L/R
2	4402	4	Screw, hexagon socket pan head M5x10 ISO 7380 Elzink 10,9
3	1190	8	Nut, nylock M5 DIN 985 Elzink 8,8
4	1191	8	Nut cover BK8 M5
5	1276	2	Nut 18x18x4xM6, square, steel
6	1311	2	Washer M6 DIN 125 Elzink
7	1210	2	Screw, hexagon M6x12 DIN 933 Elzink 8,8
8	4919	2	Bracket for fitting two crutches
9	4401	4	Screw, hexagon socket pan head M5x16 ISO7380 Elzink 10,9
10	000326	4	Crutch fitting, universal

Part no.	Qty	Description
.	.	.
.	.	.
.	.	.
.	.	.

Product name:	**Crutch fitting, w/strap 2 crutch**
Product no:	**HP20071093**
Product reference:	**Balder F/L**
Manufacturer:	Etac AS, www.etac.com
Revision:	**01.01.07**

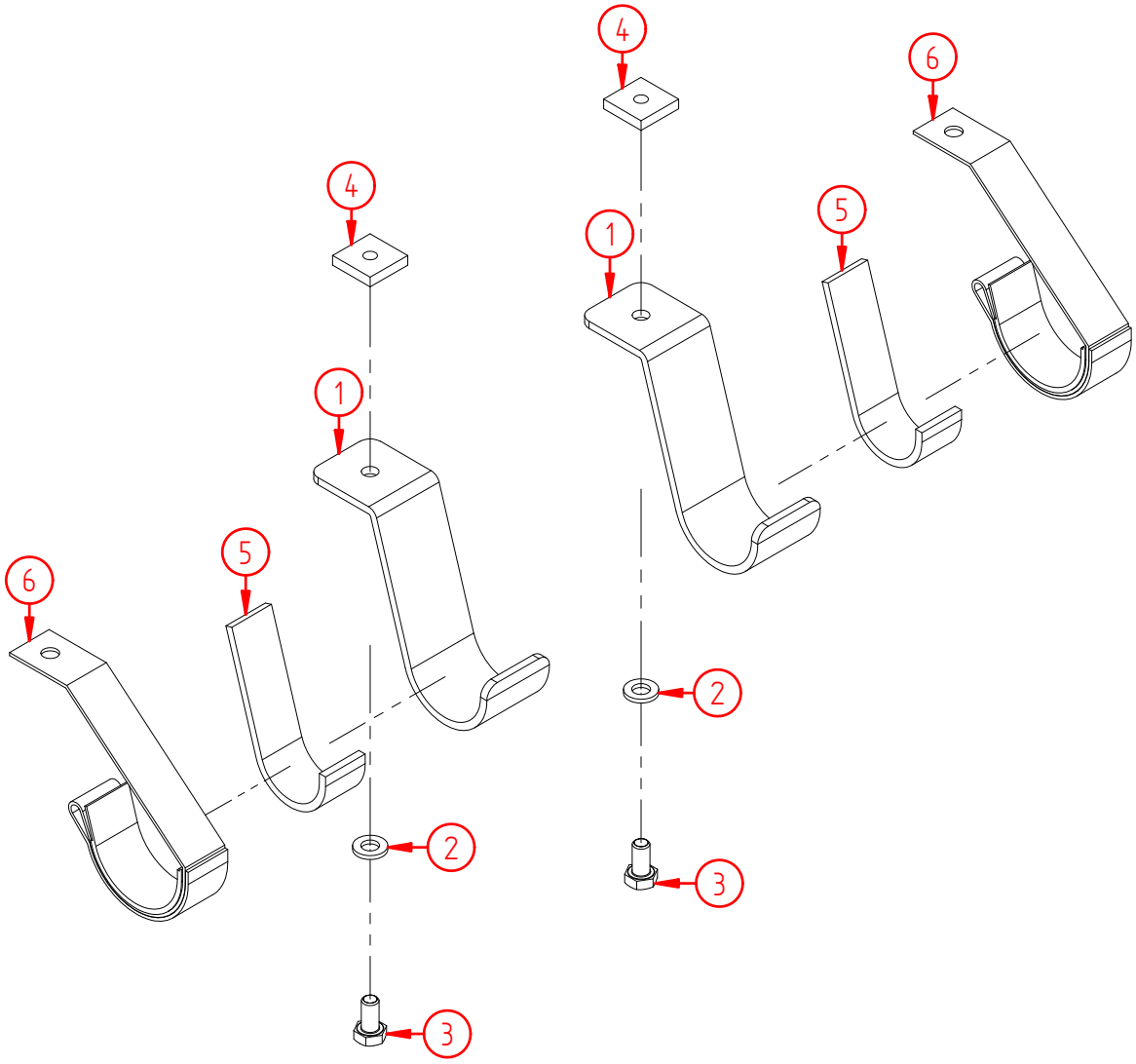

Product name:	**Crutch fitting, w/strap 2 crutch**
Product no:	**HP20071093**
Product reference:	**Balder F/L**
Manufacturer:	Etac AS, www.etac.com
Revision:	**01.01.07**

Pos no.	Part no.	Qty	Description
1	10958	2	Bracket, crutcfitting w/strap
2	1311	2	Washer M6 DIN 125 Elzink
3	1210	2	Screw, hexagon M6x12 DIN 933 Elzink 8,8
4	1276	2	Nut 18x18x4xM6, square, steel
5	9343	2	Foamtape 19mm x 33m
6	11762	2	Strap, crutch fitting

Part no.	Qty	Description
.	.	.
.	.	.
.	.	.
.	.	.

Product name:	**Lights, Front & Rear, Balder F/L/J**
Product no:	**HP20071094**
Product reference:	**Balder F/L/J**
Manufacturer:	Etac AS, www.etac.com
Revision:	**01.01.07**

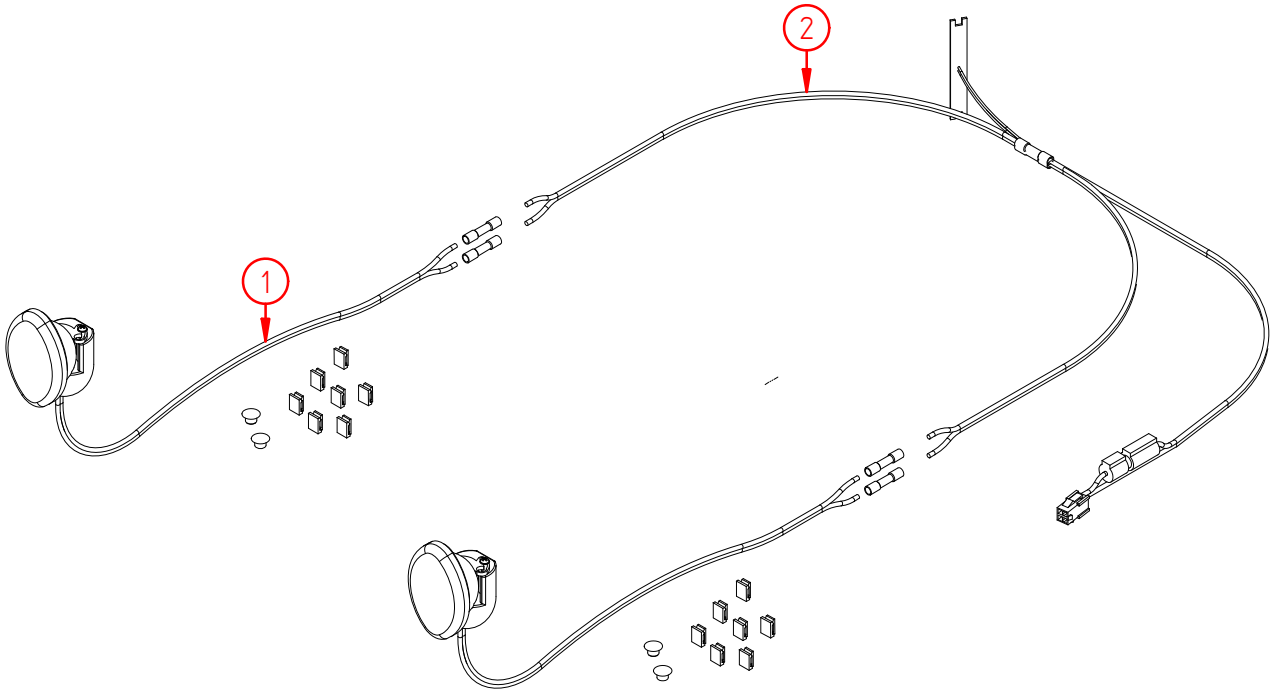

Product name:	**Lights, Front & Rear, Balder F/L/J**
Product no:	**HP20071094**
Product reference:	**Balder F/L/J**
Manufacturer:	Etac AS, www.etac.com
Revision:	**01.01.07**

Pos no.	Part no.	Qty	Description
1	11538	2	Frontlight, complete Balder F/L/J
2	11539	1	Wiring set, light Balder F/L/J

Part no.	Qty	Description
.	.	.
.	.	.
.	.	.
.	.	.

Product name:	**Lights, Front & Rear w/Indicators, Balder F/L/J**
Product no:	**HP20071095**
Product reference:	**Balder F/L/J**
Manufacturer:	Etac AS, www.etac.com
Revision:	**01.01.07**

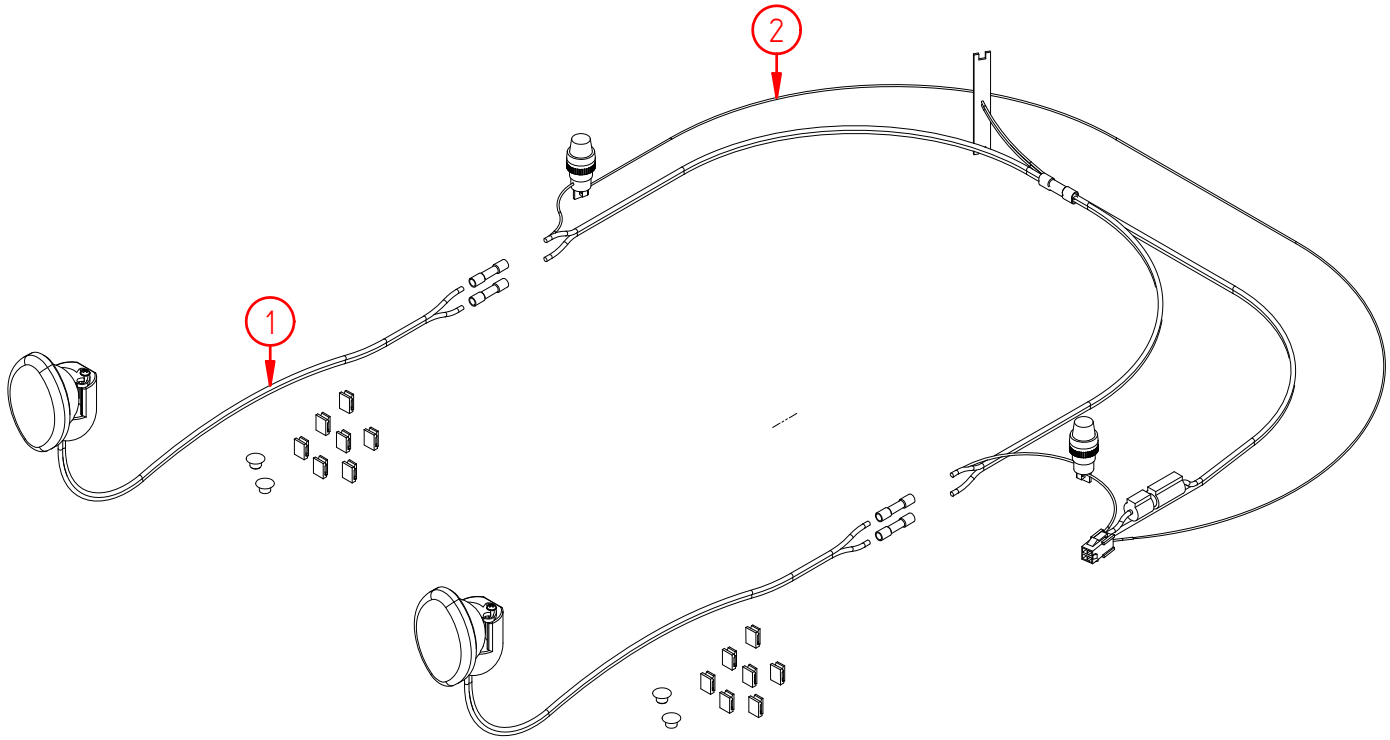

Product name:	**Lights, Front & Rear w/Indicators, Balder F/L/J**
Product no:	**HP20071095**
Product reference:	**Balder F/L/J**
Manufacturer:	Etac AS, www.etac.com
Revision:	**01.01.07**

Pos no.	Part no.	Qty	Description
1	11538	2	Frontlight, complete Balder F/L/J
2	11540	1	Wiring set, light w/indicators Balder F/L/J

Part no.	Qty	Description
.	.	.
.	.	.
.	.	.
.	.	.

Product name:	**Lights, front and rear Balder F/L/J, w/ ACU3 Joystick**
Product no:	**HP20071096**
Product reference:	**Balder F/L/J**
Manufacturer:	Etac AS, www.etac.com
Revision:	**01.01.07**

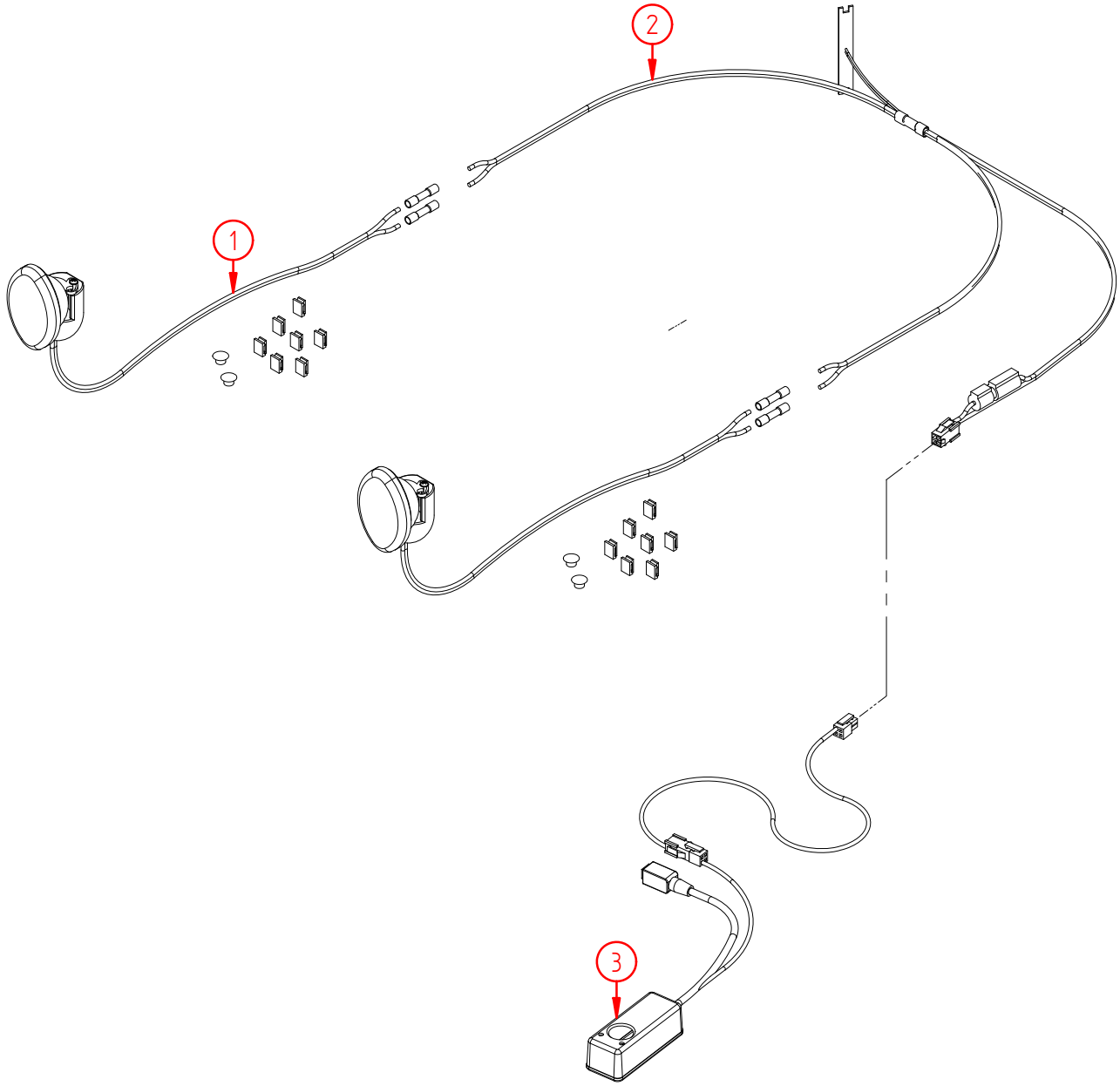

Product name:	**Lights, front and rear Balder F/L/J, w/ ACU3 Joystick**
Product no:	**HP20071096**
Product reference:	**Balder F/L/J**
Manufacturer:	Etac AS, www.etac.com
Revision:	**01.01.07**

Pos no.	Part no.	Qty	Description
1	11538	2	Frontlight, complete Balder F/L/J
2	11539	1	Wiring set, light Balder F/L/J
3	10926	1	Panel, lights Balder F/L/J w/ACU3 joystick

Part no.	Qty	Description
.	.	.
.	.	.
.	.	.
.	.	.

Product name:	**Basket, removable, fitted to back F/L/J**
Product no:	**HP20071097**
Product reference:	**Balder F/L/J**
Manufacturer:	Etac AS, www.etac.com
Revision:	**01.01.07**

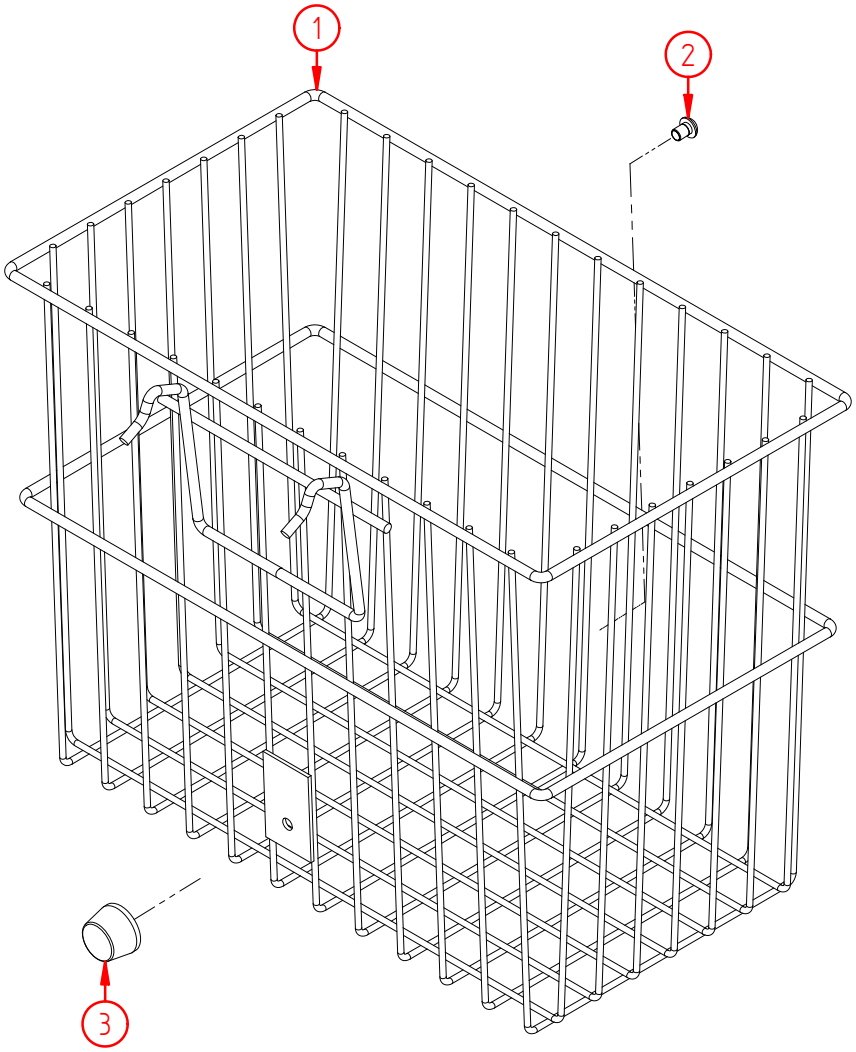

Product name:	**Basket, removable, fitted to back F/L/J**
Product no:	**HP20071097**
Product reference:	**Balder F/L/J**
Manufacturer:	Etac AS, www.etac.com
Revision:	**01.01.07**

Pos no.	Part no.	Qty	Description
1	000530	1	Basket for wheelchair
2	1212	1	Screw, hexagon socket pan head M6x8 ISO7380 Elzink 10,9
3	9265	1	Impact rubber knob 25x17xM6

Part no.	Qty	Description
.	.	.
.	.	.
.	.	.
.	.	.

Product name:	**Mounting bracket, backpack/basket Balder F/L**
Product no:	**HP20071098**
Product reference:	**Balder F/L**
Manufacturer:	Etac AS, www.etac.com
Revision:	**01.01.07**

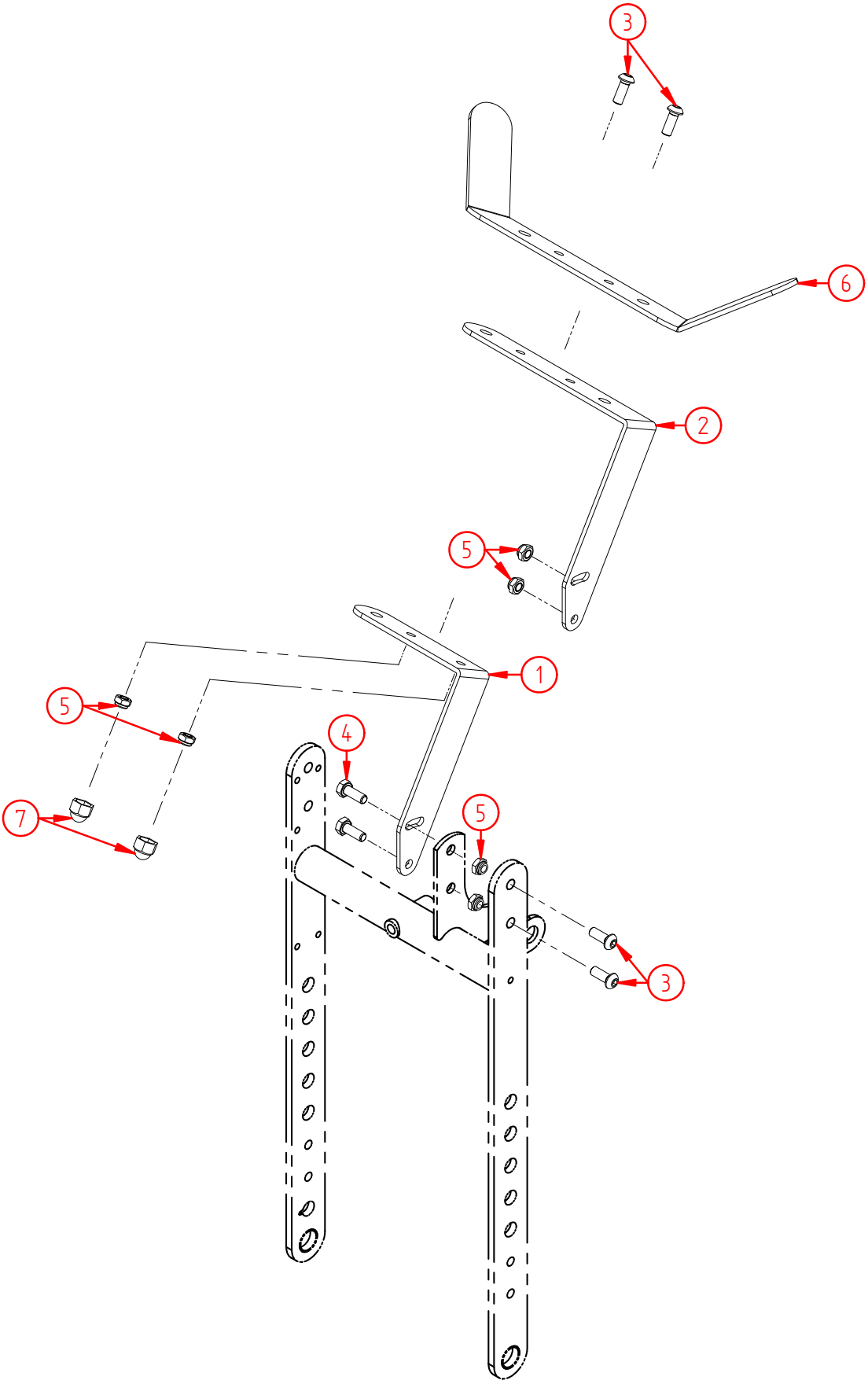

Product name:	**Mounting bracket, backpack/basket Balder F/L**
Product no:	**HP20071098**
Product reference:	**Balder F/L**
Manufacturer:	Etac AS, www.etac.com
Revision:	**01.01.07**

Pos no.	Part no.	Qty	Description
1	4269	1	Bracket for basket fitted to back F/L/J240
2	4270	1	Outward bracket for basket fitted to back F/L/J240
3	1107	4	Screw, hexagon socket pan head M6x16 ISO7380 Elzink 10,9
4	1084	2	Screw, hexagon M6x16 DIN 933 Elzink 8,8
5	1157	6	Nut, nylock M6 DIN 985 Elzink 8,8
6	4529	1	Bracket for rucksack/basket F/L
7	1192	2	Nut cover BK10 M6

Part no.	Qty	Description
.	.	.
.	.	.
.	.	.
.	.	.

Product name:	**Mounting bracket, backpack/basket Balder J**
Product no:	**HP20071099**
Product reference:	**Balder J**
Manufacturer:	Etac AS, www.etac.com
Revision:	**01.01.07**

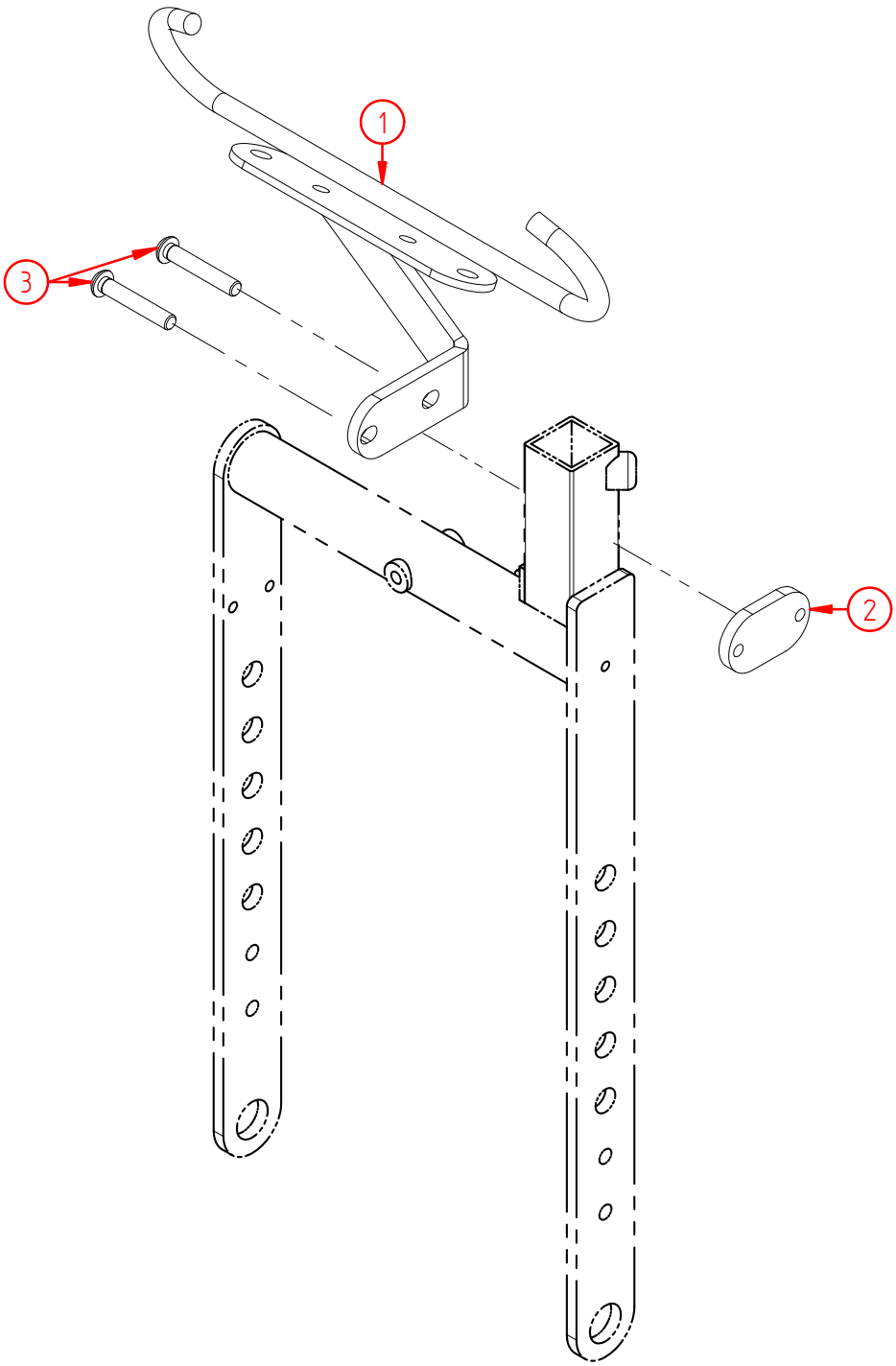

Product name:	**Mounting bracket, backpack/basket Balder J**
Product no:	**HP20071099**
Product reference:	**Balder J**
Manufacturer:	Etac AS, www.etac.com
Revision:	**01.01.07**

Pos no.	Part no.	Qty	Description
1	11044	1	Bracket for rucksack/basket, Junior
2	11045	1	Clamping plate, Bracket for rucksack/basket Junior
3	4387	2	Screw, hexagon socket pan head M6x35 DIN 7380 Elzink 8,8

Part no.	Qty	Description
.	.	.
.	.	.
.	.	.
.	.	.

Product name:	**Mounting bracket, backpack/basket Balder J 240**
Product no:	**HP20071100**
Product reference:	**Balder J240**
Manufacturer:	Etac AS, www.etac.com
Revision:	**01.01.07**

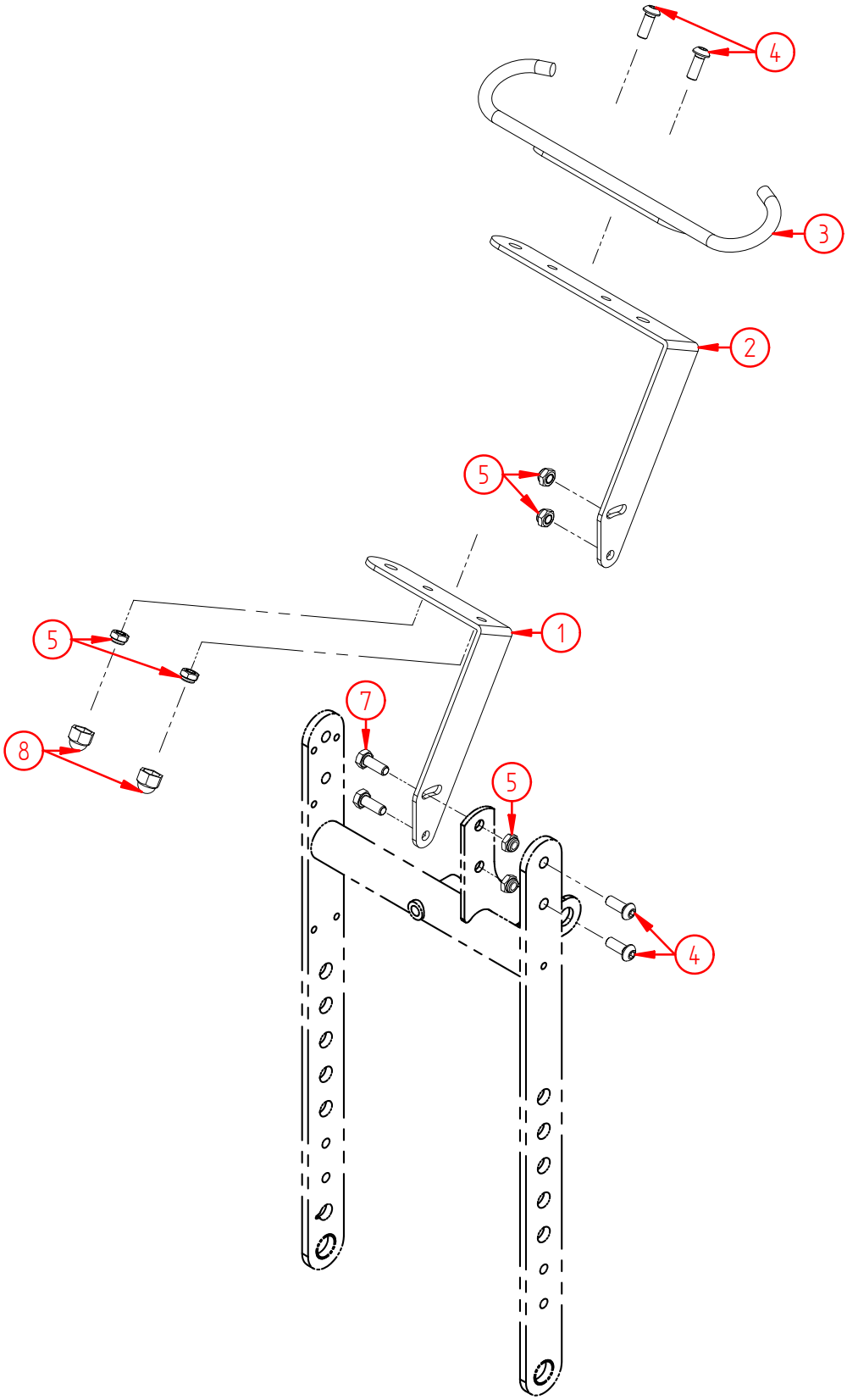

Product name:	**Mounting bracket, backpack/basket Balder J 240**
Product no:	**HP20071100**
Product reference:	**Balder J240**
Manufacturer:	Etac AS, www.etac.com
Revision:	**01.01.07**

Pos no.	Part no.	Qty	Description
1	4269	1	Bracket for basket fitted to back F/L/J240
2	4270	1	Outward bracket for basket fitted to back F/L/J240
3	11631	1	Bracket for rucksack/basket, J240
4	1107	4	Screw, hexagon socket pan head M6x16 ISO7380 Elzink 10,9
5	1157	6	Nut, nylock M6 DIN 985 Elzink 8,8
7	1084	2	Screw, hexagon M6x16 DIN 933 Elzink 8,8
8	1192	2	Nut cover BK10 M6

Part no.	Qty	Description
.	.	.
.	.	.
.	.	.
.	.	.

Product name:	**Belt, hip safety w/reel, Balder F/L**
Product no:	**HP20071101**
Product reference:	**Balder F/L**
Manufacturer:	Etac AS, www.etac.com
Revision:	**26.09.07**

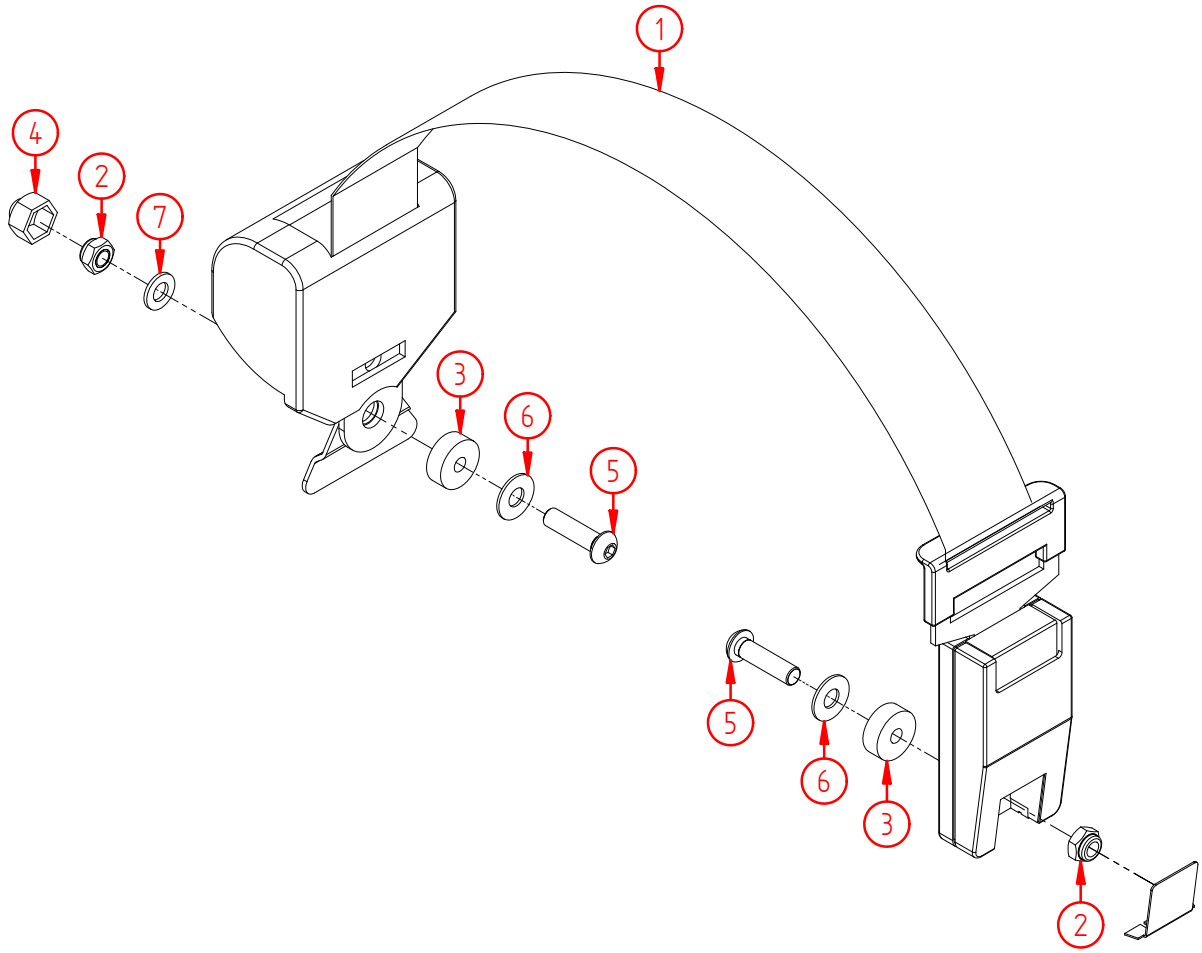

Product name:	**Belt, hip safety w/reel, Balder F/L**
Product no:	**HP20071101**
Product reference:	**Balder F/L**
Manufacturer:	Etac AS, www.etac.com
Revision:	**26.09.07**

Pos no.	Part no.	Qty	Description
1	11616	1	Hip safety belt w/reel, Balder F/L/J
2	1070	2	Nut, nylock M8 DIN 985 El.zink 8,8
3	10020	2	Spacer, Black nylon, T22/08/6,5
4	3759	1	Nut cover BK13 M8
5	1069	2	Screw, hexagon socket pan head M8x30 DIN 7380 Elzink 10,9
6	1064	2	Washer M8x20 DIN 522 Elzink
7	1340	1	Washer M8 DIN 125 Elzink

Part no.	Qty	Description
.	.	.
.	.	.
.	.	.
.	.	.

Product name:	**Belt, hip safety w/reel, Balder J**
Product no:	**HP20071102**
Product reference:	**Balder J**
Manufacturer:	Etac AS, www.etac.com
Revision:	**01.01.07**

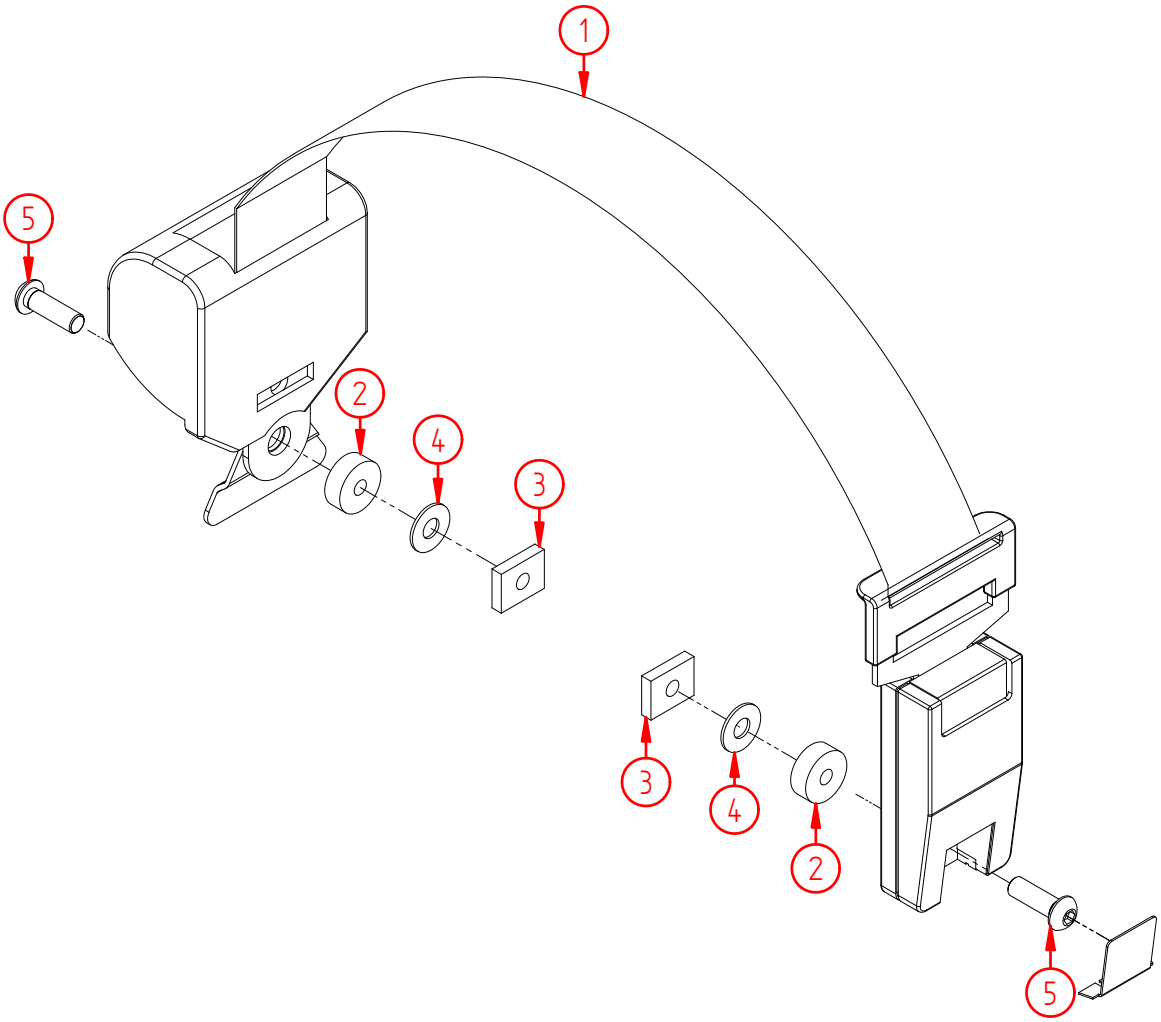

Product name:	**Belt, hip safety w/reel, Balder J**
Product no:	**HP20071102**
Product reference:	**Balder J**
Manufacturer:	Etac AS, www.etac.com
Revision:	**01.01.07**

Pos no.	Part no.	Qty	Description
1	11616	1	Hip safety belt w/reel, Balder F/L/J
2	10020	2	Spacer, Black nylon, T22/08/6,5
3	11562	2	Nut, 23x18x5xM8, square, steel
4	1064	2	Washer M8x20 DIN 522 Elzink
5	1124	2	Screw, hexagon socket pan head M8x25 DIN 7380 Elzink 8,8

Part no.	Qty	Description
.	.	.
.	.	.
.	.	.
.	.	.

Product name:	**Belt, hip safety w/reel, Recaro**
Product no:	**HP20071103**
Product reference:	**Balder Recaro**
Manufacturer:	Etac AS, www.etac.com
Revision:	**01.01.07**

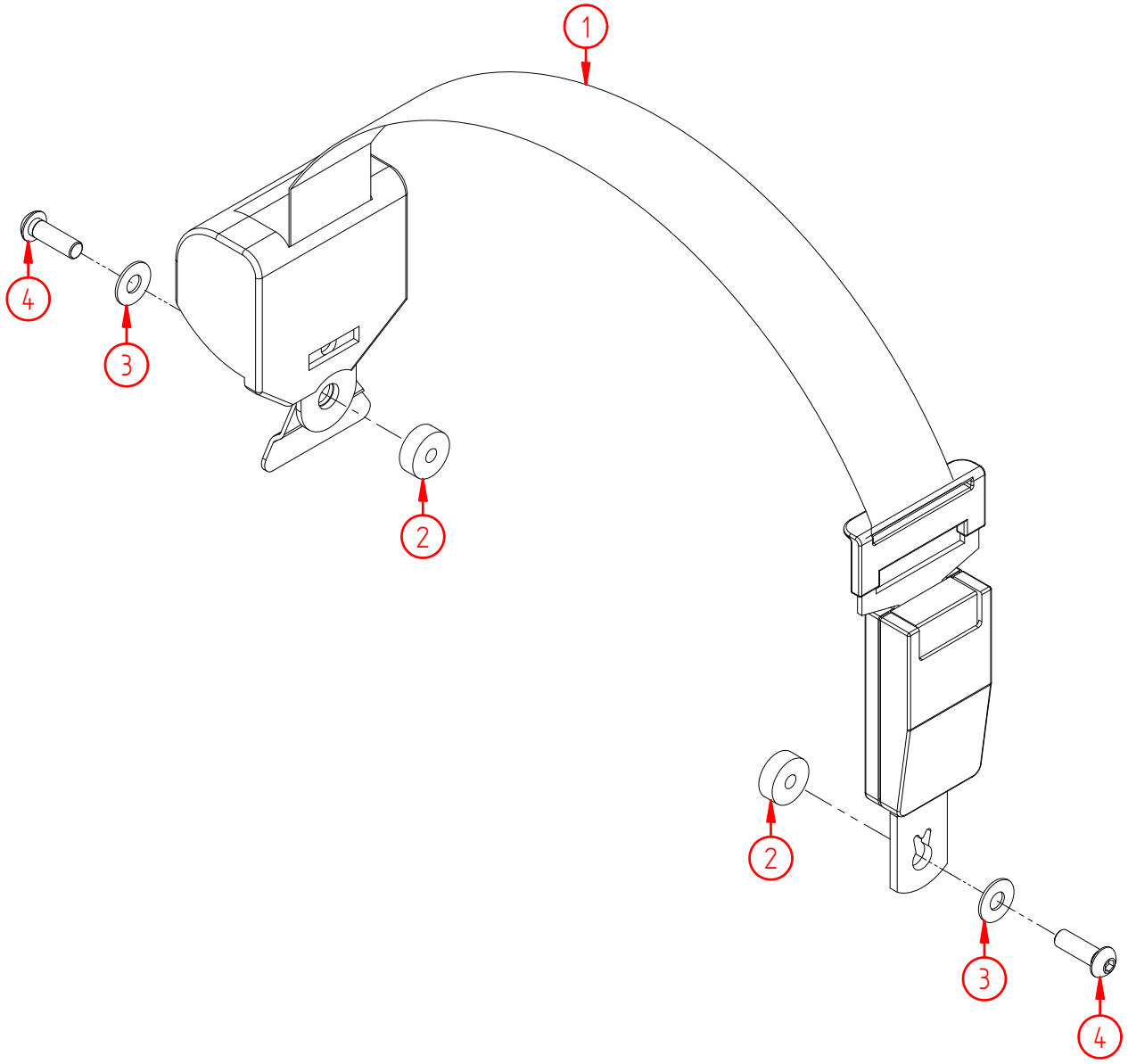

Product name:	**Belt, hip safety w/reel, Recaro**
Product no:	**HP20071103**
Product reference:	**Balder Recaro**
Manufacturer:	Etac AS, www.etac.com
Revision:	**01.01.07**

Pos no.	Part no.	Qty	Description
1	000559	1	Hip safety belt
2	10020	2	Spacer, Black nylon, T22/08/6,5
3	1064	2	Washer M8x20 DIN 522 Elzink
4	1124	2	Screw, hexagon socket pan head M8x25 DIN 7380 Elzink 8,8

Part no.	Qty	Description
.	.	.
.	.	.
.	.	.
.	.	.

Product name:	**Belt, hip safety w/auto lock**
Product no:	**HP20071104**
Product reference:	**Balder F/L**
Manufacturer:	Etac AS, www.etac.com
Revision:	**01.01.07**

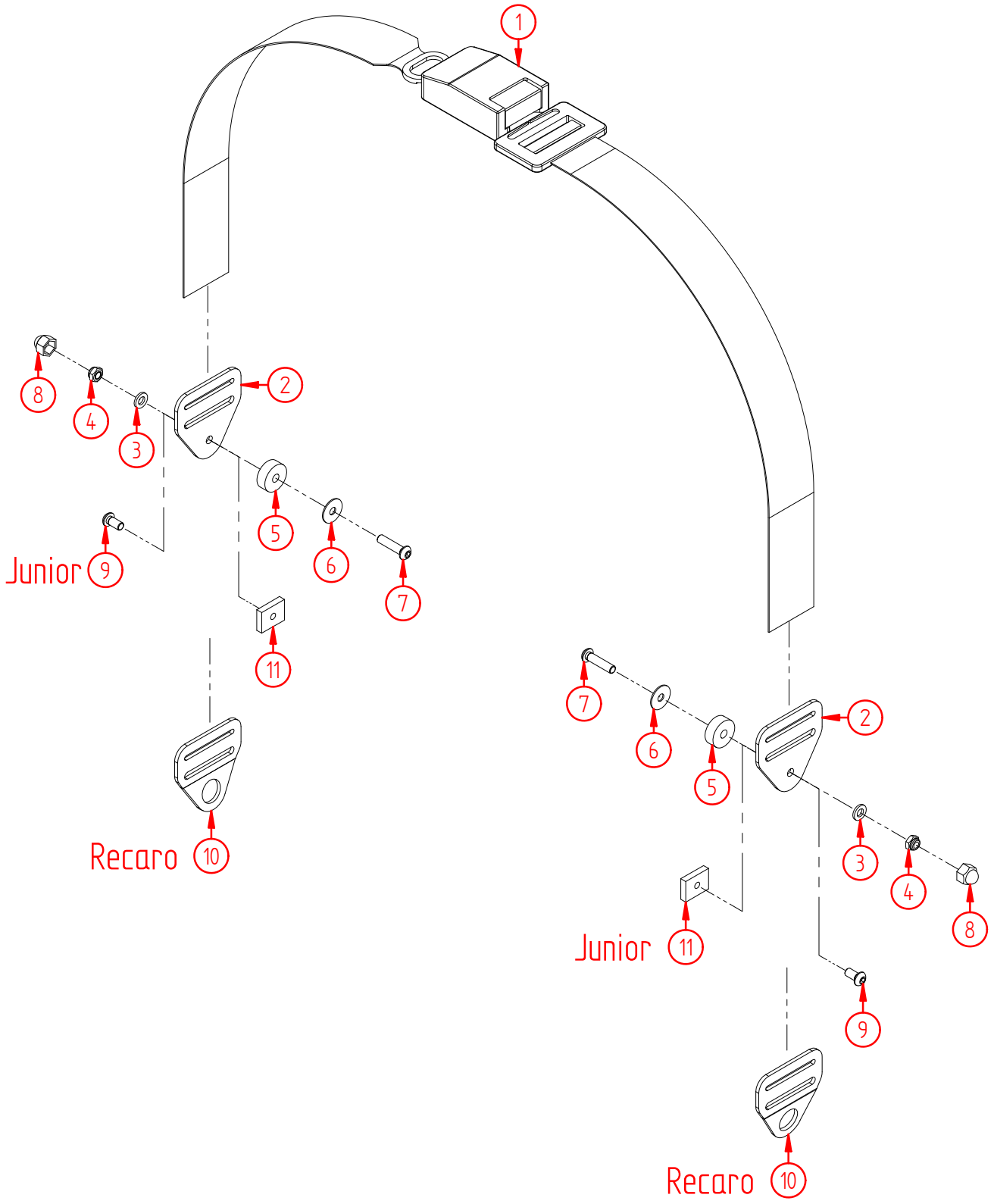

Product name:	**Belt, hip safety w/auto lock**
Product no:	**HP20071104**
Product reference:	**Balder F/L**
Manufacturer:	Etac AS, www.etac.com
Revision:	**01.01.07**

Pos no.	Part no.	Qty	Description
1	3736	1	Belt, hip safety
2	4310	2	Strap hook Ø6
3	1311	2	Washer M6 DIN 125 Elzink
4	1157	2	Nut, nylock M6 DIN 985 Elzink 8,8
5	10020	2	Spacer, Black nylon, T22/08/6,5
6	1338	2	Washer M6x20 DIN 522 Elzink
7	1310	2	Screw, hexagon socket pan head M6x25 ISO7380 Elzink 10,9
8	1192	2	Nut cover BK10 M6
9	1312	2	Screw, hexagon socket pan head M6x12 ISO7380 Elzink 10,9
10	4311	2	Strap hook Ø18
11	10107	2	Nut, 23x18x5xM6, square, steel

Part no.	Qty	Description
.	.	.
.	.	.
.	.	.
.	.	.

Product name:	**Belt, shoulder strap for 4-point harness, Balder F/L/J, Recaro**
Product no:	**HP20071105**
Product reference:	**Balder F/L**
Manufacturer:	Etac AS, www.etac.com
Revision:	**01.01.07**

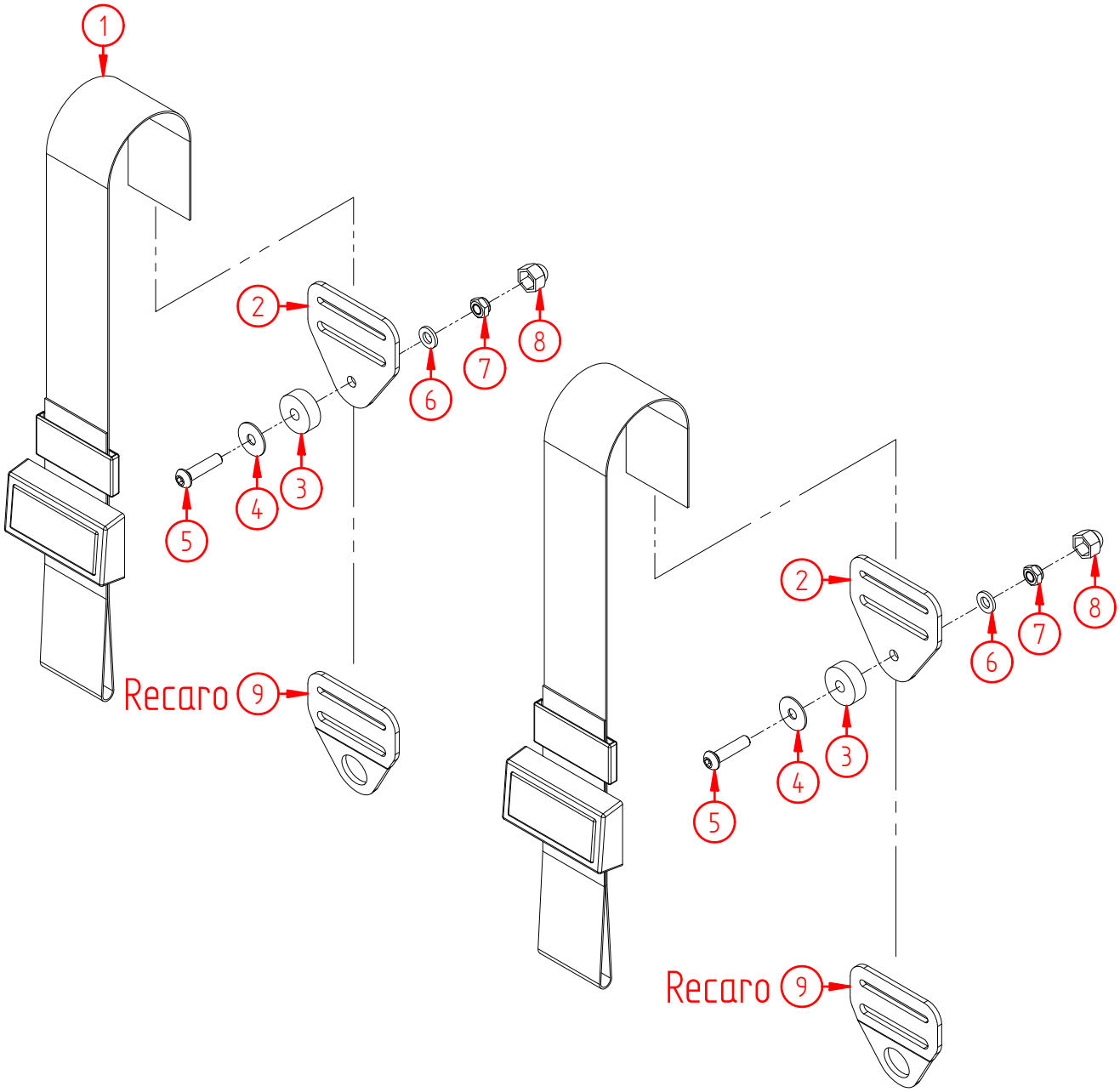

Product name:	**Belt, shoulder strap for 4-point harness, Balder F/L/J, Recaro**
Product no:	**HP20071105**
Product reference:	**Balder F/L**
Manufacturer:	Etac AS, www.etac.com
Revision:	**01.01.07**

Pos nr.	Dele nr.	Antall	Benevnelse
1	3737	1	Skulderbelte sett
2	4310	2	Reimkrok Ø6
3	10020	2	Avstandshylse, sort nylon T22/08/6,5
4	1338	2	Skive, skjerm M6x20 DIN 522 Elzink
5	1310	2	Skrue, umbraco linse M6x25 ISO7380 Elzink 10,9
6	1311	2	Skive, underlag M6 DIN 125 Elzink
7	1157	2	Mutter, nylock M6 DIN 985 Elzink 8,8
8	1192	2	Mutterhette BK10 M6
9	4311	2	Reimkrok Ø18

Part no.	Qty	Description
.	.	.
.	.	.
.	.	.
.	.	.

Product name:	**Belt, chest harness, Balder F/L**
Product no:	**HP20071106**
Product reference:	**Balder F/L**
Manufacturer:	Etac AS, www.etac.com
Revision:	**06.12.07**

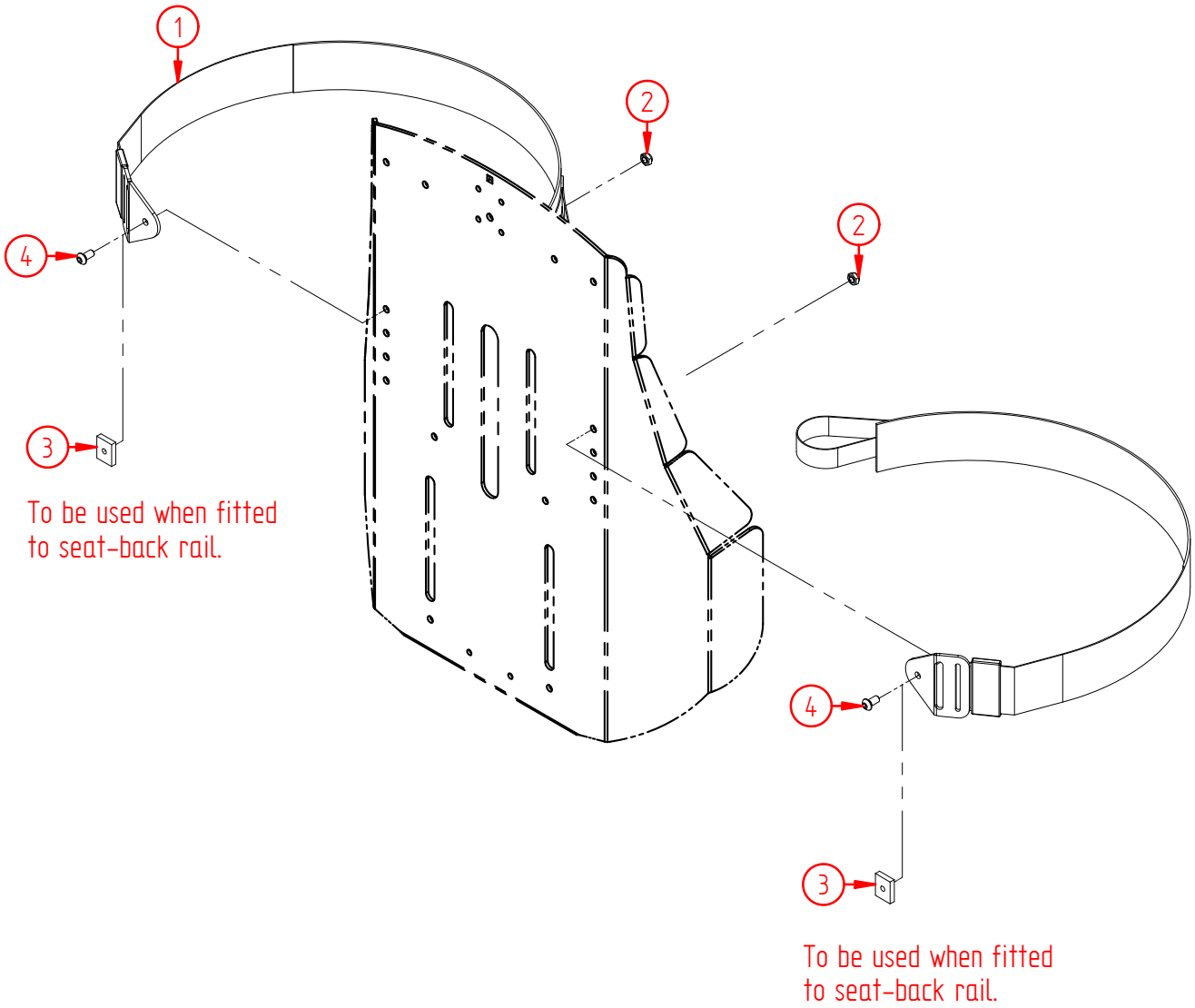

Product name:	**Belt, chest harness, Balder F/L**
Product no:	**HP20071106**
Product reference:	**Balder F/L**
Manufacturer:	Etac AS, www.etac.com
Revision:	**06.12.07**

Pos no.	Part no.	Qty	Description
1	11063	1	Chest belt, F/L metal seatback chassis
2	1157	2	Nut, nylock M6 DIN 985 Elzink 8,8
3	10107	2	Nut, 23x18x5xM6, square, steel
4	1312	2	Screw, hexagon socket pan head M6x12 ISO7380 Elzink 10,9

Part no.	Qty	Description
.	.	.
.	.	.
.	.	.
.	.	.

Product name:	**Belt, chest harness, Balder J**
Product no:	**HP20071107**
Product reference:	**Balder J**
Manufacturer:	Etac AS, www.etac.com
Revision:	**06.12.07**

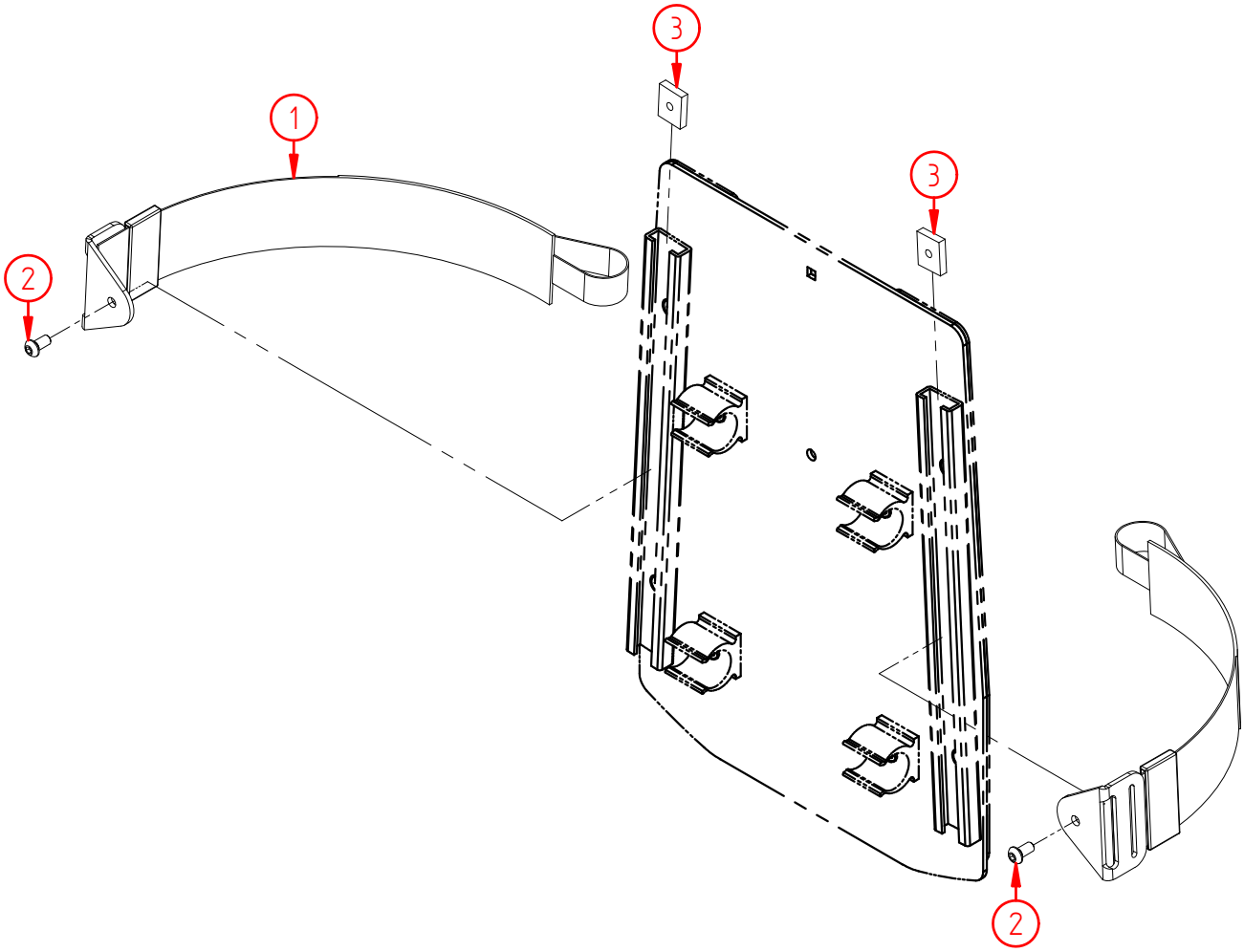

Product name:	**Belt, chest harness, Balder J**
Product no:	**HP20071107**
Product reference:	**Balder J**
Manufacturer:	Etac AS, www.etac.com
Revision:	**06.12.07**

Pos no.	Part no.	Qty	Description
1	11698	1	Chest belt, J metal seatback chassis
2	1312	2	Screw, hexagon socket pan head M6x12 ISO7380 Elzink 10,9
3	10107	2	Nut, 23x18x5xM6, square, steel

Part no.	Qty	Description
.	.	.
.	.	.
.	.	.
.	.	.

Product name:	**Belt, chest harness, Recaro**
Product no:	**HP20071108**
Product reference:	**Balder F/L**
Manufacturer:	Etac AS, www.etac.com
Revision:	**01.01.07**

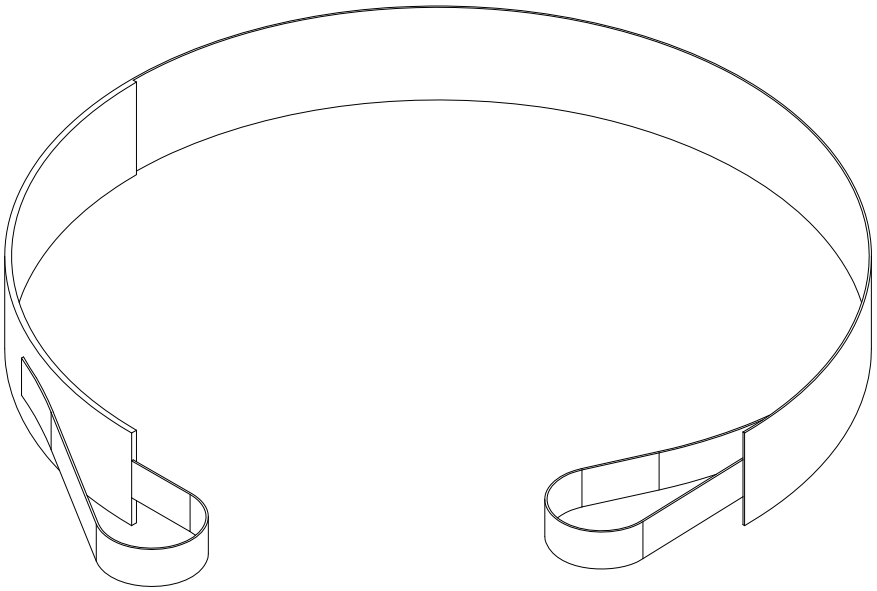

Product name:	**Bag, armrest**
Product no:	**HP20071109**
Product reference:	**Balder F/L**
Manufacturer:	Etac AS, www.etac.com
Revision:	**01.01.07**

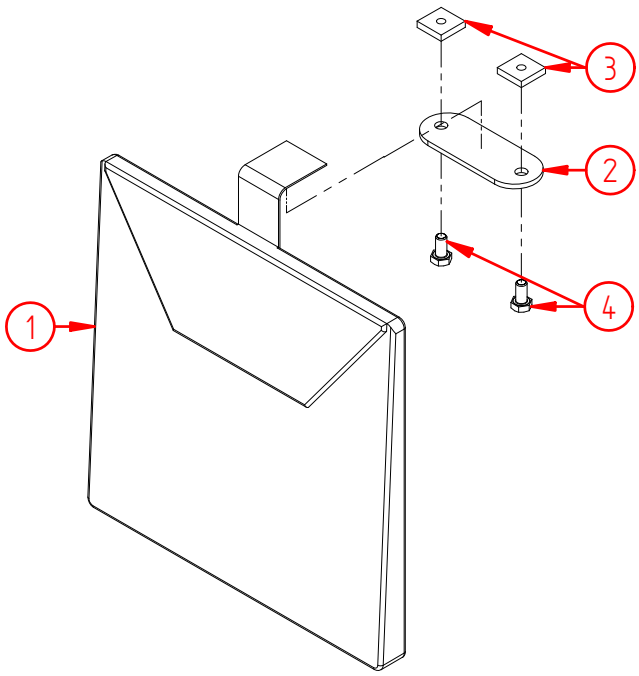

Product name:	**Bag, with zipper**
Product no:	**HP20071110**
Product reference:	**Balder F/L**
Manufacturer:	Etac AS, www.etac.com
Revision:	**01.01.07**

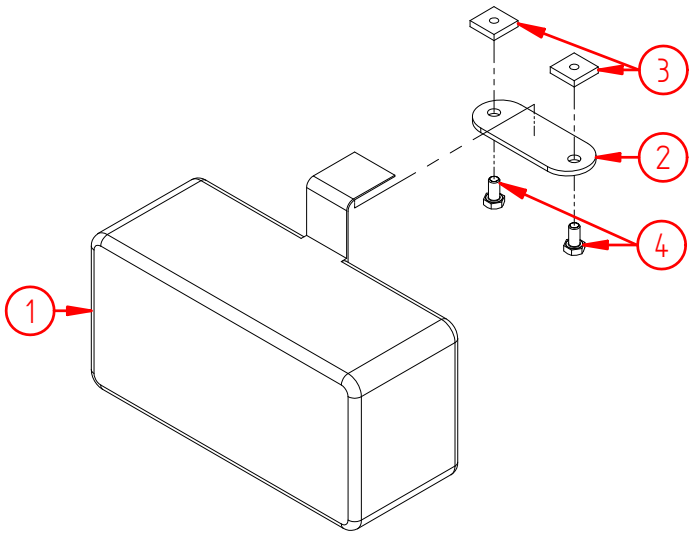

Product name:	**Bag, armrest**
Product no:	**HP20071109**
Product reference:	**Balder F/L**
Manufacturer:	Etac AS, www.etac.com
Revision:	**01.01.07**

Pos no.	Part no.	Qty	Description
1	4273	1	Armrest bag Balder F/L
2	4272	1	Bracket, for armrest bag F
3	1276	2	Nut 18x18x4xM6, square, steel
4	1210	2	Screw, hexagon M6x12 DIN 933 Elzink 8,8

Product name:	**Bag, with zipper**
Product no:	**HP20071110**
Product reference:	**Balder F/L**
Manufacturer:	Etac AS, www.etac.com
Revision:	**01.01.07**

Pos no.	Part no.	Qty	Description
1	10959	1	Bag with zipper
2	4272	1	Bracket, for armrest bag F
3	1276	2	Nut 18x18x4xM6, square, steel
4	1210	2	Screw, hexagon M6x12 DIN 933 Elzink 8,8

Product name:	**Bag, back, 40x40x8, Balder F/L**
Product no:	**HP20071111**
Product reference:	**Balder F/L**
Manufacturer:	Etac AS, www.etac.com
Revision:	**01.01.07**

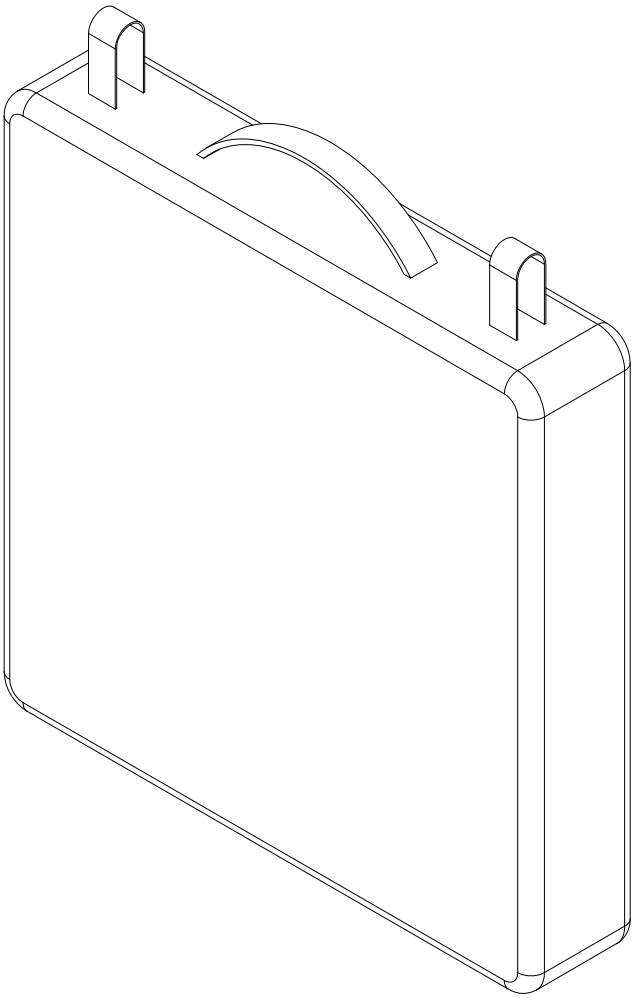

Product name:	**Backpack, black, Balder F/L**
Product no:	**HP20071112**
Product reference:	**Balder F/L**
Manufacturer:	**HAND-PRO AS**
Revision:	**01.01.07**

Product name:	**Backpack, black, Balder J**
Product no:	**HP20071113**
Product reference:	**Balder F/L**
Manufacturer:	**HAND-PRO AS**
Revision:	**01.01.07**

Product name:	**Support Pads, Seat Back, Red, 6x11 Junior**
Product no:	**HP20071114**
Product reference:	**Balder J**
Manufacturer:	Etac AS, www.etac.com
Revision:	**01.01.07**

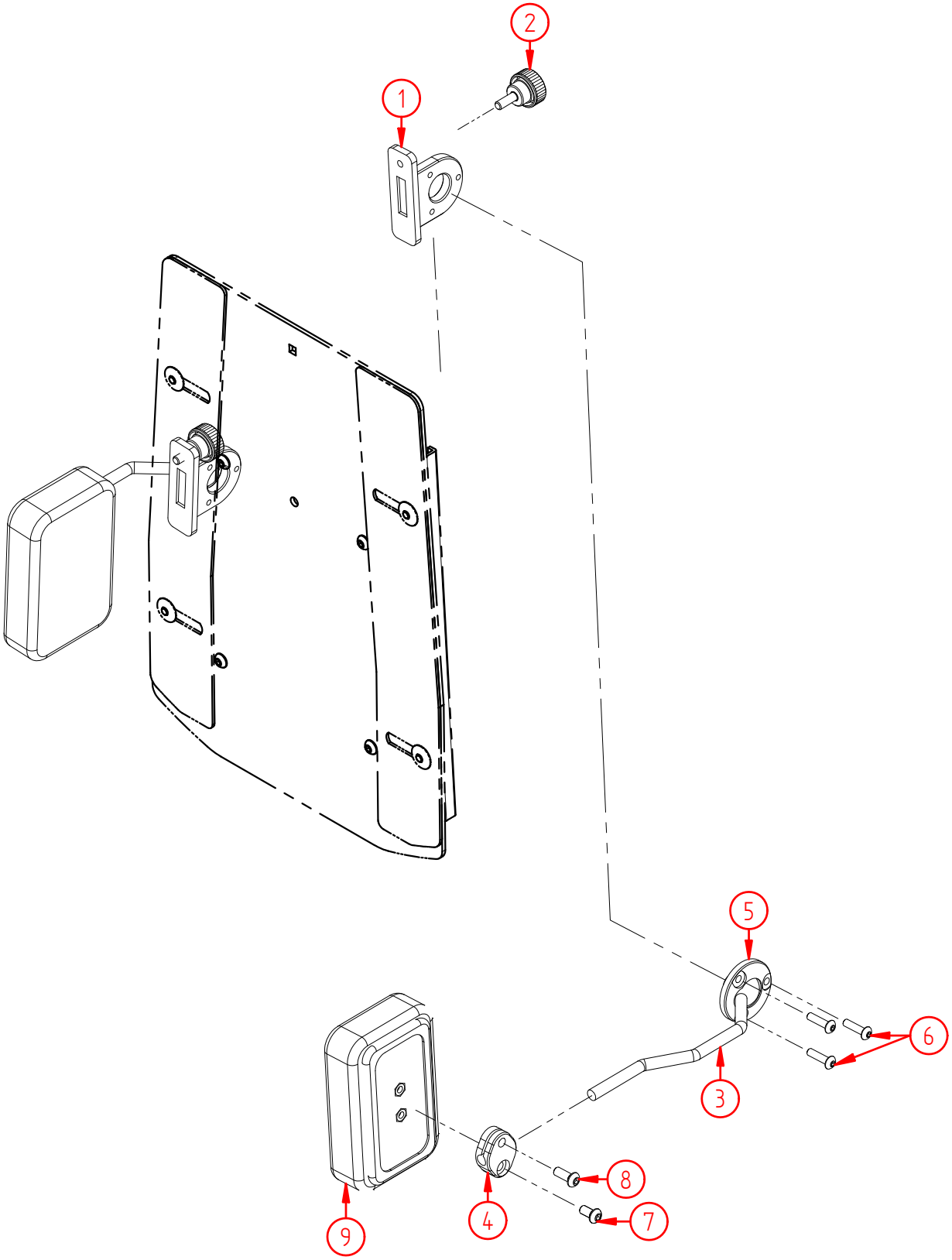

Product name:	**Support Pads, Seat Back, Red, 6x11 Junior**
Product no:	**HP20071114**
Product reference:	**Balder J**
Manufacturer:	Etac AS, www.etac.com
Revision:	**01.01.07**

Pos no.	Part no.	Qty	Description
1	11402	2	Bracket, fixation, sidesupport back, L-RH, F/L/J
2	000302	2	Fixation screw, WN67 23-M6x15
3	11399	2	Bar, side support back, R-LH, Junior
4	10114	2	Bracket, oval, clamp for bar Ø8
5	3045	2	Clamping ring
6	4225	6	Screw, hexagon socket pan head M5x20 DIN 7380 Elzink 10,9
7	1312	2	Screw, hexagon socket pan head M6x12 ISO7380 Elzink 10,9
8	1107	2	Screw, hexagon socket pan head M6x16 ISO7380 Elzink 10,9
9	11586	2	Cushion, red, support pad knee/thigh, 6x11cm, Junior

Part no.	Qty	Description
.	.	.
.	.	.
.	.	.
.	.	.

Product name:	**Support Pads, Seat Back, Blue, 6x11 Junior**
Product no:	**HP20071115**
Product reference:	**Balder J**
Manufacturer:	Etac AS, www.etac.com
Revision:	**01.01.07**

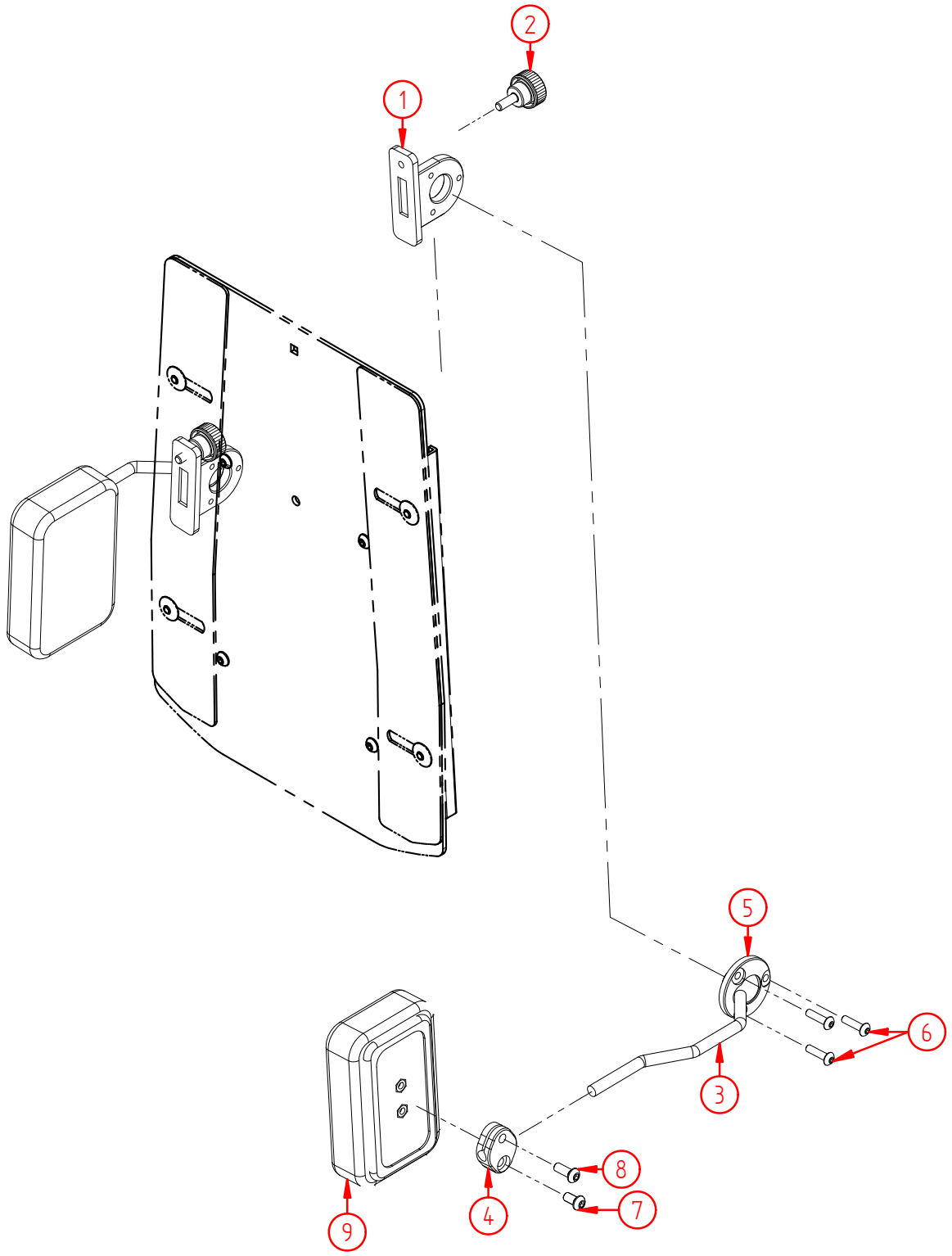

Product name:	**Support Pads, Seat Back, Blue, 6x11 Junior**
Product no:	**HP20071115**
Product reference:	**Balder J**
Manufacturer:	Etac AS, www.etac.com
Revision:	**01.01.07**

Pos no.	Part no.	Qty	Description
1	11402	2	Bracket, fixation, sidesupport back, L-RH, F/L/J
2	000302	2	Fixation screw, WN67 23-M6x15
3	11399	2	Bar, side support back, R-LH, Junior
4	10114	2	Bracket, oval, clamp for bar Ø8
5	3045	2	Clamping ring
6	4225	6	Screw, hexagon socket pan head M5x20 DIN 7380 Elzink 10,9
7	1312	2	Screw, hexagon socket pan head M6x12 ISO7380 Elzink 10,9
8	1107	2	Screw, hexagon socket pan head M6x16 ISO7380 Elzink 10,9
9	11587	2	Cushion, blue, support pad knee/thigh, 6x11cm, Junior

Part no.	Qty	Description
.	.	.
.	.	.
.	.	.
.	.	.

Product name:	**Support Pads, Seat Back, Green, 6x11 Junior**
Product no:	**HP20071116**
Product reference:	**Balder J**
Manufacturer:	Etac AS, www.etac.com
Revision:	**01.01.07**

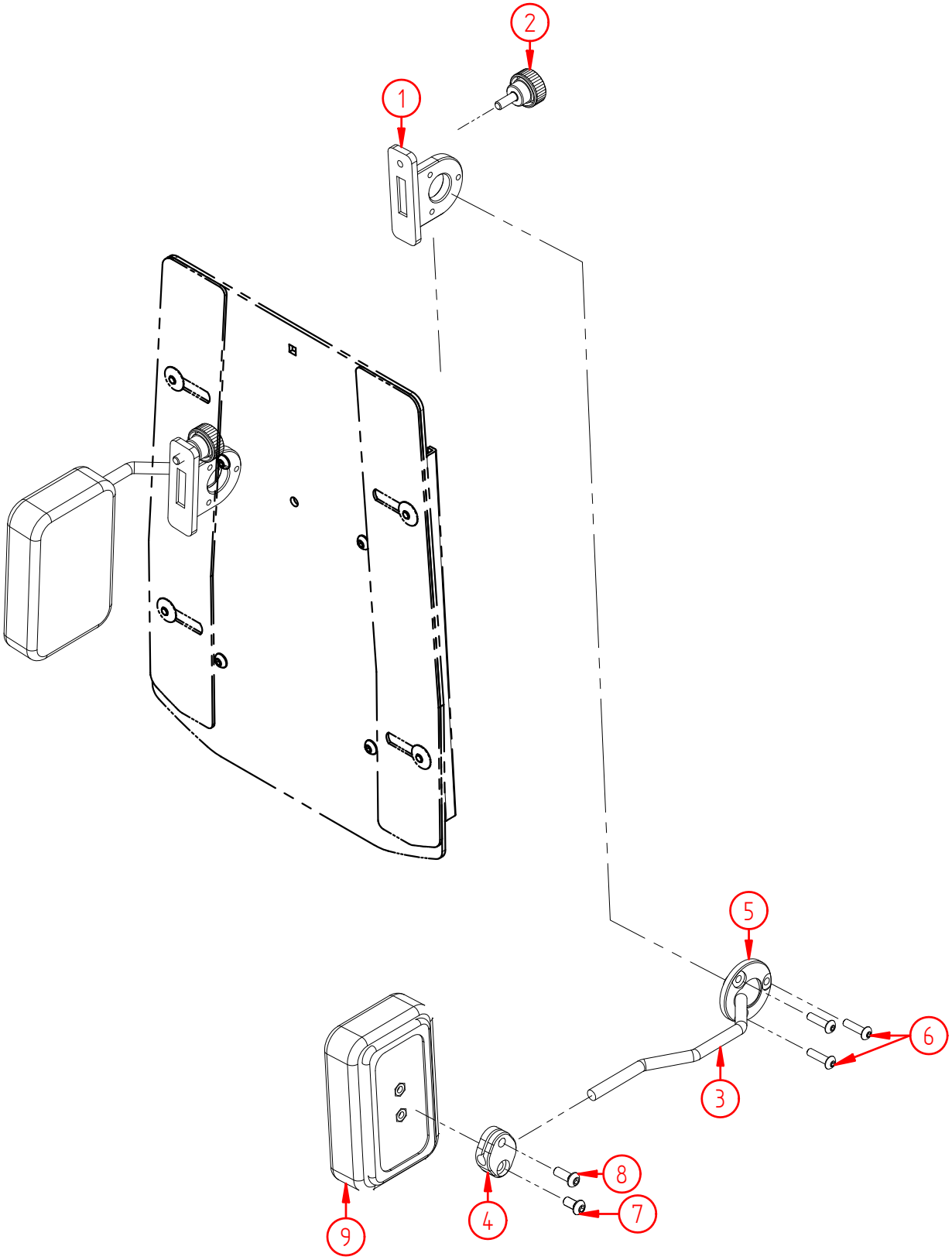

Product name:	**Support Pads, Seat Back, Green, 6x11 Junior**
Product no:	**HP20071116**
Product reference:	**Balder J**
Manufacturer:	Etac AS, www.etac.com
Revision:	**01.01.07**

Pos no.	Part no.	Qty	Description
1	11402	2	Bracket, fixation, sidesupport back, L-RH, F/L/J
2	000302	2	Fixation screw, WN67 23-M6x15
3	11399	2	Bar, side support back, R-LH, Junior
4	10114	2	Bracket, oval, clamp for bar Ø8
5	3045	2	Clamping ring
6	4225	6	Screw, hexagon socket pan head M5x20 DIN 7380 Elzink 10,9
7	1312	2	Screw, hexagon socket pan head M6x12 ISO7380 Elzink 10,9
8	1107	2	Screw, hexagon socket pan head M6x16 ISO7380 Elzink 10,9
9	11588	2	Cushion, green, support pad knee/thigh, 6x11cm, Junior

Part no.	Qty	Description
.	.	.
.	.	.
.	.	.
.	.	.

Product name:	**Support Pads, Seat Back, 8x11 Comfort 1-3**
Product no:	**HP20071117**
Product reference:	**Balder F/L**
Manufacturer:	Etac AS, www.etac.com
Revision:	**21.02.11**

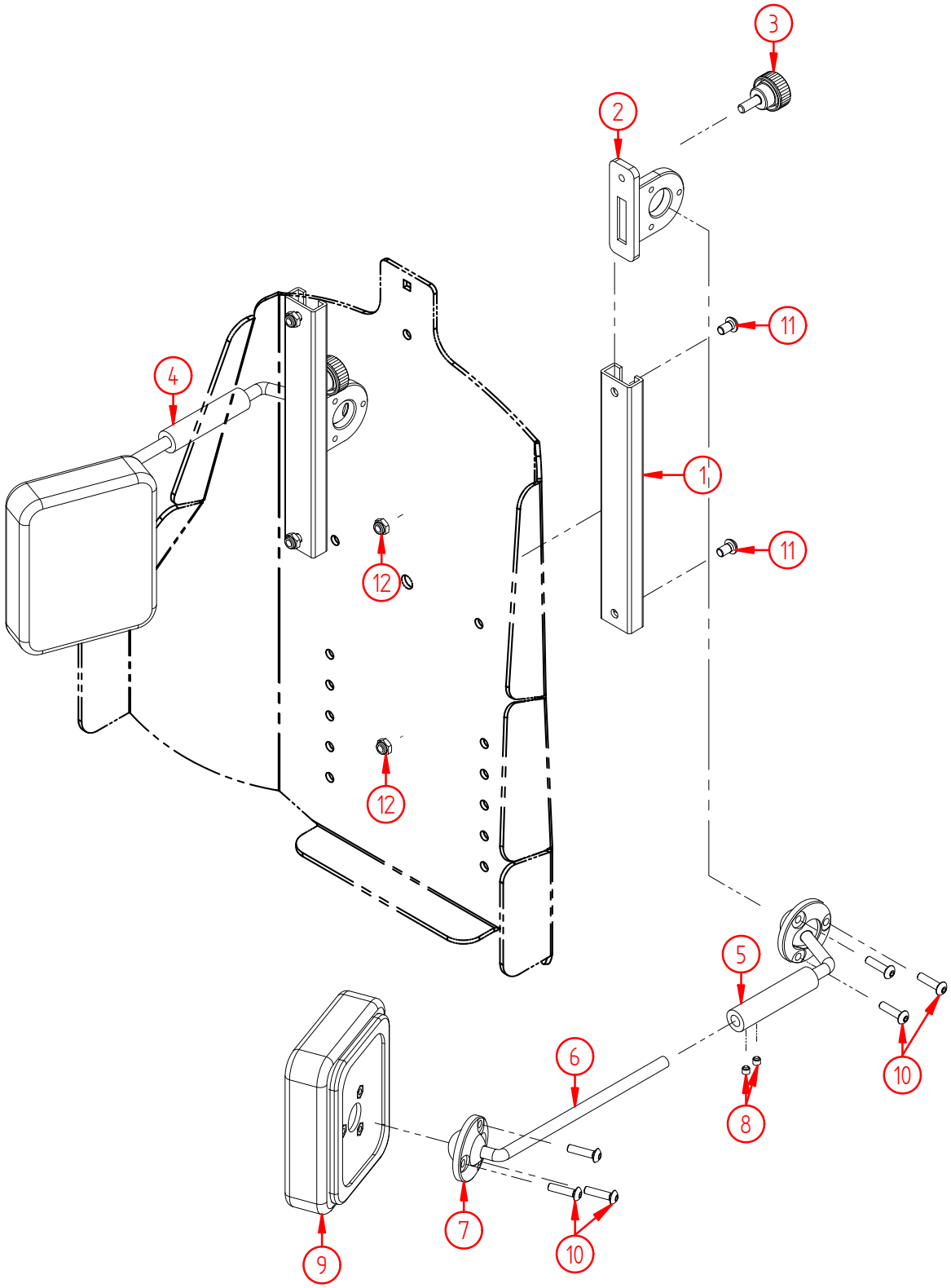

Product name:	**Support Pads, Seat Back, 8x11 Comfort 1-3**
Product no:	**HP20071117**
Product reference:	**Balder F/L**
Manufacturer:	Etac AS, www.etac.com
Revision:	**21.02.11**

Pos no.	Part no.	Qty	Description
1	10742	2	Rail, seat back, Junior 240- F/L C03VA
2	11402	2	Bracket, fixation, sidesupport back, L-RH, F/L/J
3	000302	2	Fixation screw, WN67 23-M6x15
4	11400	1	Bar w/sleeve, side support back, RH, Comfort 1-6
5	11401	1	Bar w/sleeve, side support back, LH, Comfort 1-6
6	11398	2	Bar, side support back, R-LH, Comfort 1-6
7	3045-6	4	Clamping ring
8	2797	4	Screw, hexagon set, M5x5 DIN 916 Unplated
9	11405	2	Pad for knee/leg/seatback support, std fabric, 80x110mm F/L
10	4225	12	Screw, hexagon socket pan head M5x20 DIN 7380 Elzink 10,9
11	3727	4	Screw, hexagon socket pan head M6x10 ISO7380 Elzink 10,9
12	1157	4	Nut, nylock M6 DIN 985 Elzink 8,8

Part no.	Qty	Description
.	.	.
.	.	.
.	.	.
.	.	.

Product name:	**Support Pads, Seat Back, 10x15 Comfort 4-6**
Product no:	**HP20071118**
Product reference:	**Balder F/L**
Manufacturer:	Etac AS, www.etac.com
Revision:	**21.02.11**

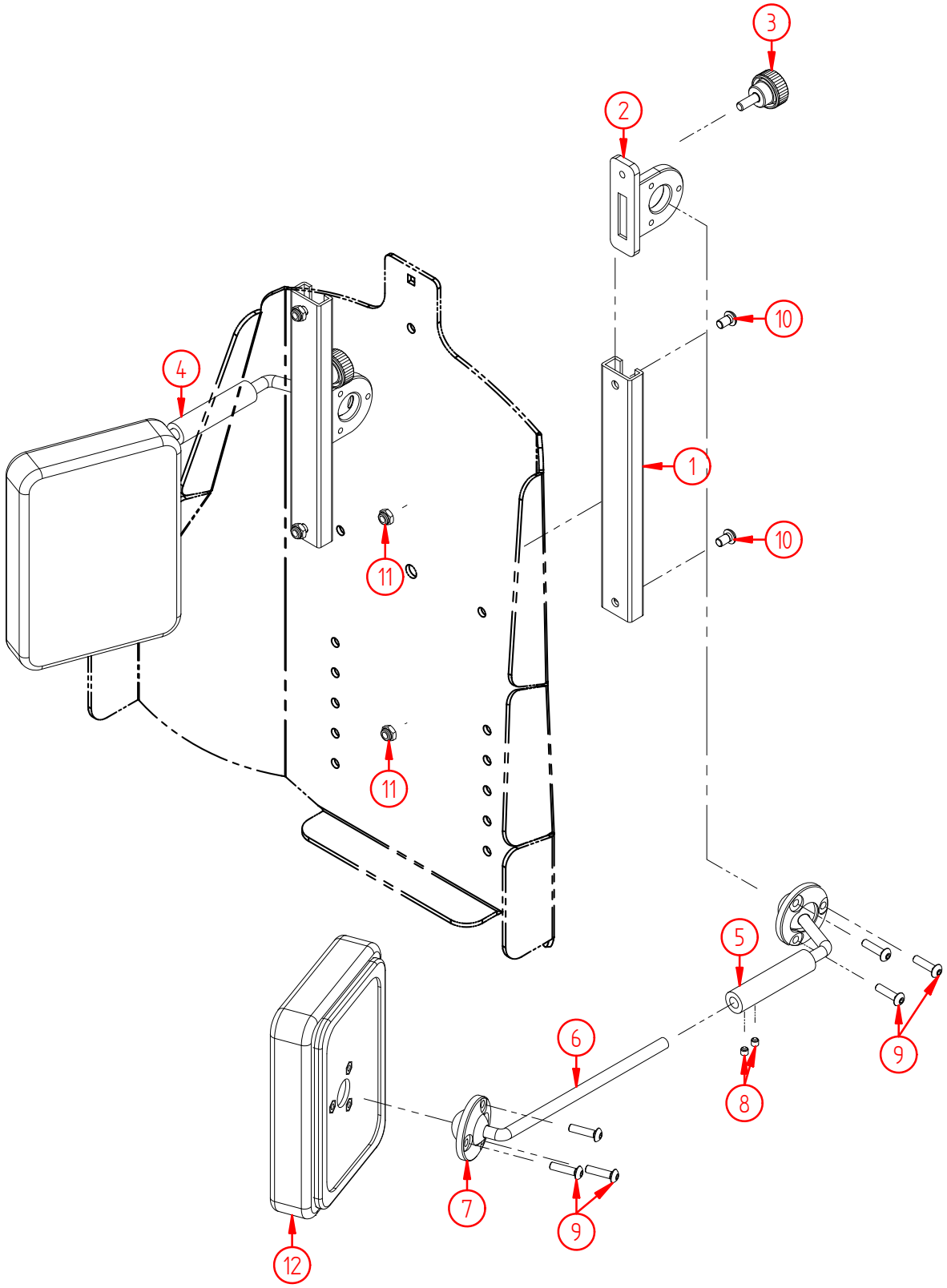

Product name:	**Support Pads, Seat Back, 10x15 Comfort 4-6**
Product no:	**HP20071118**
Product reference:	**Balder F/L**
Manufacturer:	Etac AS, www.etac.com
Revision:	**21.02.11**

Pos no.	Part no.	Qty	Description
1	10742	2	Rail, seat back, Junior 240- F/L C03VA
2	11402	2	Bracket, fixation, sidesupport back, L-RH, F/L/J
3	000302	2	Fixation screw, WN67 23-M6x15
4	11400	1	Bar w/sleeve, side support back, RH, Comfort 1-6
5	11401	1	Bar w/sleeve, side support back, LH, Comfort 1-6
6	11398	2	Bar, side support back, R-LH, Comfort 1-6
7	3045-6	4	Clamping ring
8	2797	4	Screw, hexagon set, M5x5 DIN 916 Unplated
9	4225	12	Screw, hexagon socket pan head M5x20 DIN 7380 Elzink 10,9
10	3727	4	Screw, hexagon socket pan head M6x10 ISO7380 Elzink 10,9
11	1157	4	Nut, nylock M6 DIN 985 Elzink 8,8
12	4573	2	Pad for knee/leg/seatback support, std fabric, 100x150mm F/L

Part no.	Qty	Description
.	.	.
.	.	.
.	.	.
.	.	.

Product name:	**Support Pads, Knee/Thigh, Red, 6x11 Junior**
Product no:	**HP20071119**
Product reference:	**Balder J**
Manufacturer:	Etac AS, www.etac.com
Revision:	**01.01.07**

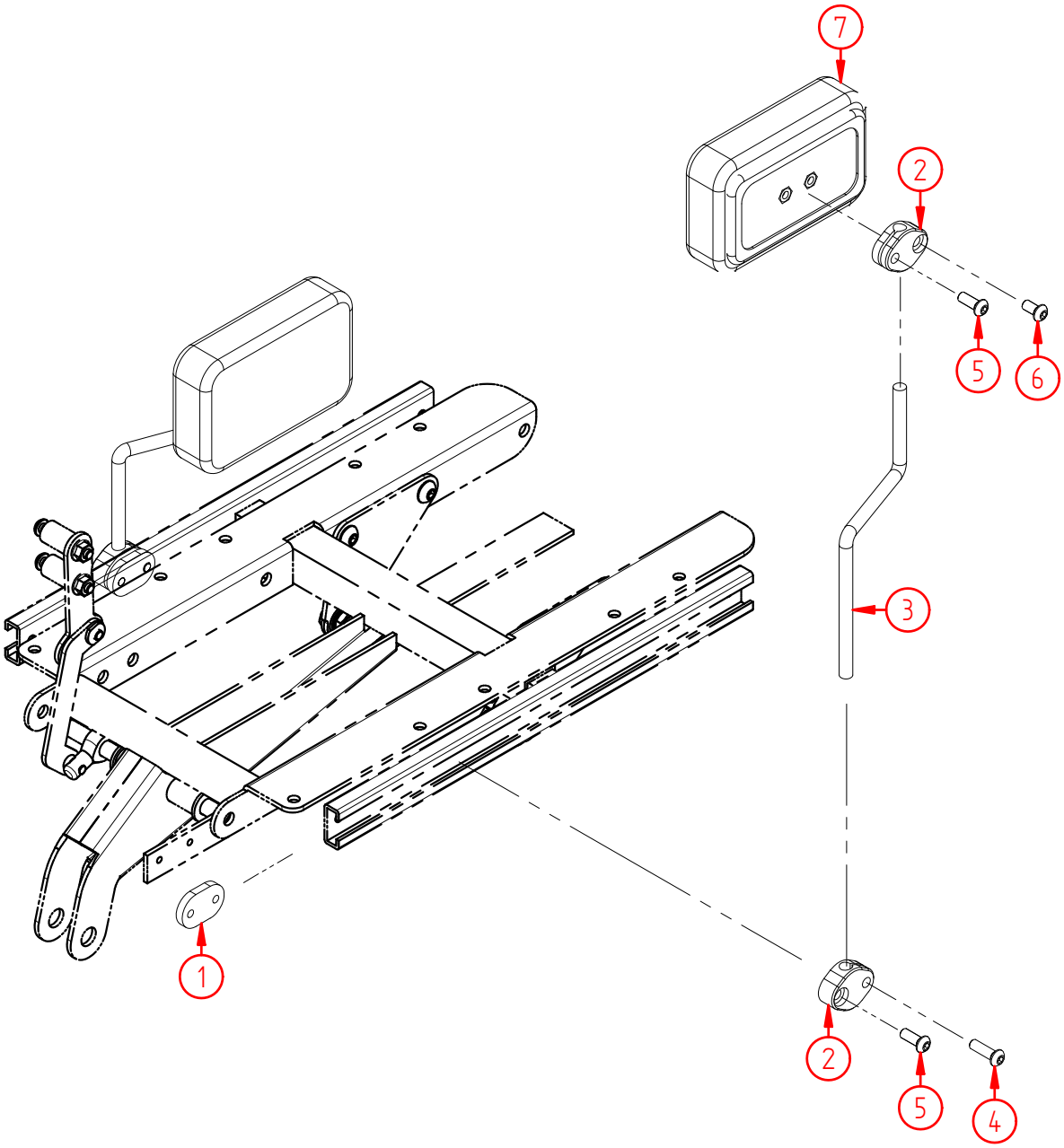

Product name:	**Support Pads, Knee/Thigh, Red, 6x11 Junior**
Product no:	**HP20071119**
Product reference:	**Balder J**
Manufacturer:	Etac AS, www.etac.com
Revision:	**01.01.07**

Pos no.	Part no.	Qty	Description
1	10108	2	Nutplate, oval, 2-hole-M6
2	10114	4	Bracket, oval, clamp for bar Ø8
3	11585	2	Bar, knee/thigh pad, Junior
4	1346	2	Screw, hexagon socket pan head M6x20 DIN 7380 Elzink 10,9
5	1107	4	Screw, hexagon socket pan head M6x16 ISO7380 Elzink 10,9
6	1312	2	Screw, hexagon socket pan head M6x12 ISO7380 Elzink 10,9
7	11586	2	Cushion, red, support pad knee/thigh, 6x11cm, Junior

Part no.	Qty	Description
.	.	.
.	.	.
.	.	.
.	.	.

Product name:	**Support Pads, Knee/Thigh, Blue, 6x11 Junior**
Product no:	**HP20071120**
Product reference:	**Balder J**
Manufacturer:	Etac AS, www.etac.com
Revision:	**01.01.07**

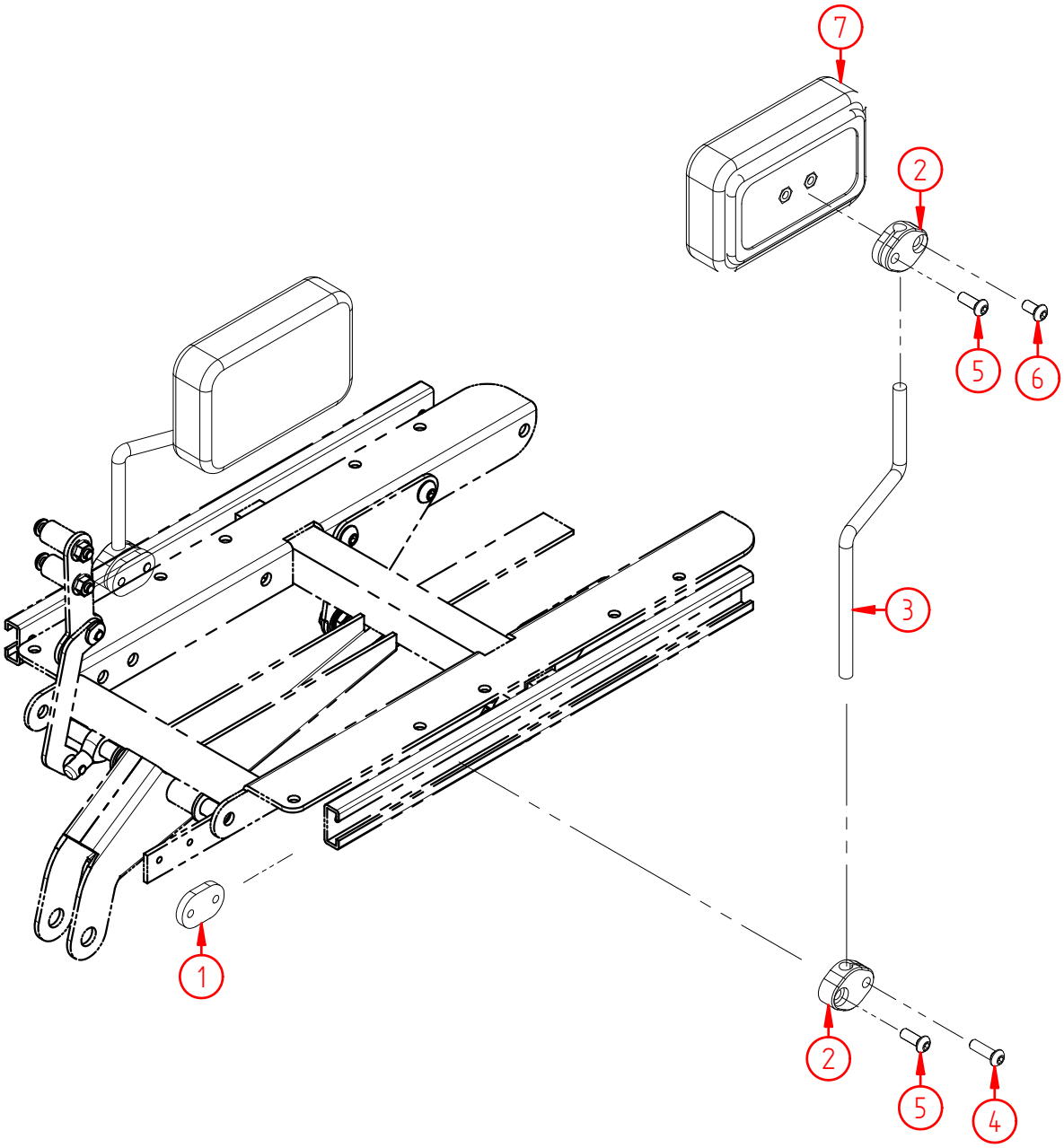

Product name:	**Support Pads, Knee/Thigh, Blue, 6x11 Junior**
Product no:	**HP20071120**
Product reference:	**Balder J**
Manufacturer:	Etac AS, www.etac.com
Revision:	**01.01.07**

Pos no.	Part no.	Qty	Description
1	10108	2	Nutplate, oval, 2-hole-M6
2	10114	4	Bracket, oval, clamp for bar Ø8
3	11585	2	Bar, knee/thigh pad, Junior
4	1346	2	Screw, hexagon socket pan head M6x20 DIN 7380 Elzink 10,9
5	1107	4	Screw, hexagon socket pan head M6x16 ISO7380 Elzink 10,9
6	1312	2	Screw, hexagon socket pan head M6x12 ISO7380 Elzink 10,9
7	11587	2	Cushion, blue, support pad knee/thigh, 6x11cm, Junior

Part no.	Qty	Description
.	.	.
.	.	.
.	.	.
.	.	.

Product name:	**Support Pads, Knee/Thigh, Green, 6x11 Junior**
Product no:	**HP20071121**
Product reference:	**Balder J**
Manufacturer:	Etac AS, www.etac.com
Revision:	**01.01.07**

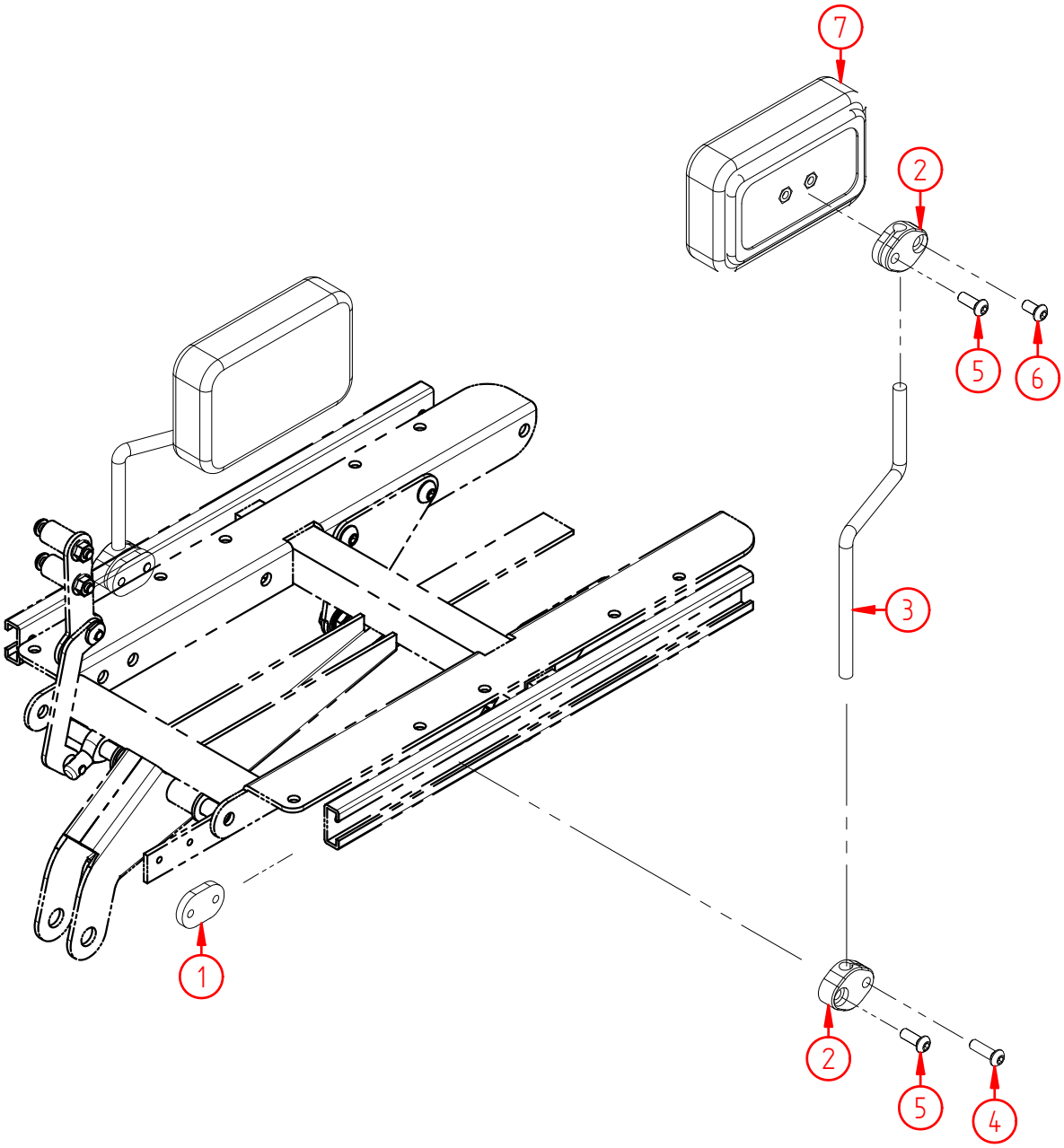

Product name:	**Support Pads, Knee/Thigh, Green, 6x11 Junior**
Product no:	**HP20071121**
Product reference:	**Balder J**
Manufacturer:	Etac AS, www.etac.com
Revision:	**01.01.07**

Pos no.	Part no.	Qty	Description
1	10108	2	Nutplate, oval, 2-hole-M6
2	10114	4	Bracket, oval, clamp for bar Ø8
3	11585	2	Bar, knee/thigh pad, Junior
4	1346	2	Screw, hexagon socket pan head M6x20 DIN 7380 Elzink 10,9
5	1107	4	Screw, hexagon socket pan head M6x16 ISO7380 Elzink 10,9
6	1312	2	Screw, hexagon socket pan head M6x12 ISO7380 Elzink 10,9
7	11588	2	Cushion, green, support pad knee/thigh, 6x11cm, Junior

Part no.	Qty	Description
.	.	.
.	.	.
.	.	.
.	.	.

Product name:	**Support Pads, Knee/Thigh, Red, 6x20 Junior**
Product no:	**HP20071122**
Product reference:	**Balder J**
Manufacturer:	Etac AS, www.etac.com
Revision:	**01.01.07**

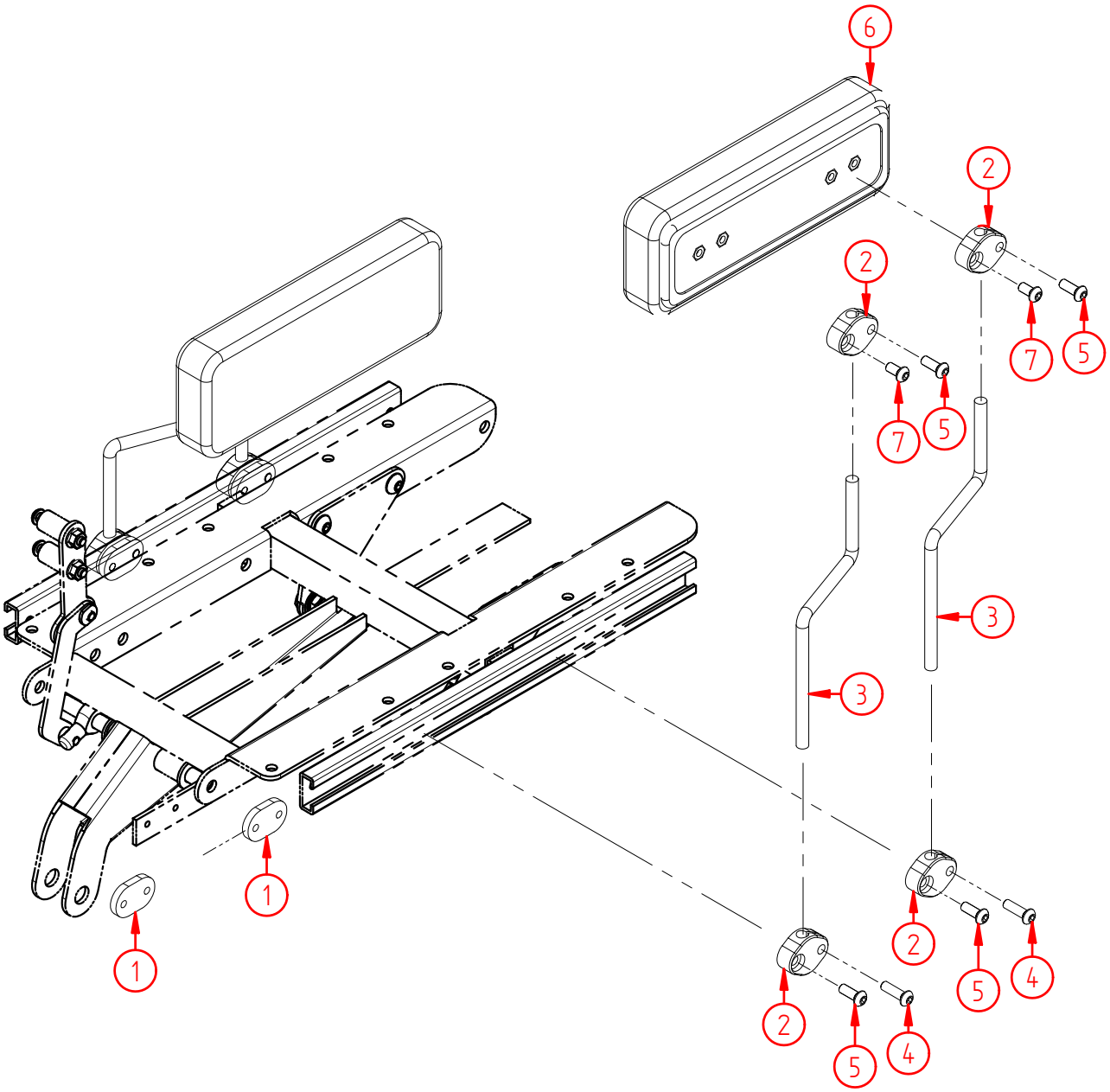

Product name:	**Support Pads, Knee/Thigh, Red, 6x20 Junior**
Product no:	**HP20071122**
Product reference:	**Balder J**
Manufacturer:	Etac AS, www.etac.com
Revision:	**01.01.07**

Pos no.	Part no.	Qty	Description
1	10108	4	Nutplate, oval, 2-hole-M6
2	10114	8	Bracket, oval, clamp for bar Ø8
3	11585	4	Bar, knee/thigh pad, Junior
4	1346	4	Screw, hexagon socket pan head M6x20 DIN 7380 Elzink 10,9
5	1107	8	Screw, hexagon socket pan head M6x16 ISO7380 Elzink 10,9
6	11589	2	Cushion, red, support pad knee/thigh, 6x20cm, Junior
7	1312	4	Screw, hexagon socket pan head M6x12 ISO7380 Elzink 10,9

Part no.	Qty	Description
.	.	.
.	.	.
.	.	.
.	.	.

Product name:	**Support Pads, Knee/Thigh, Blue, 6x20 Junior**
Product no:	**HP20071123**
Product reference:	**Balder J**
Manufacturer:	Etac AS, www.etac.com
Revision:	**01.01.07**

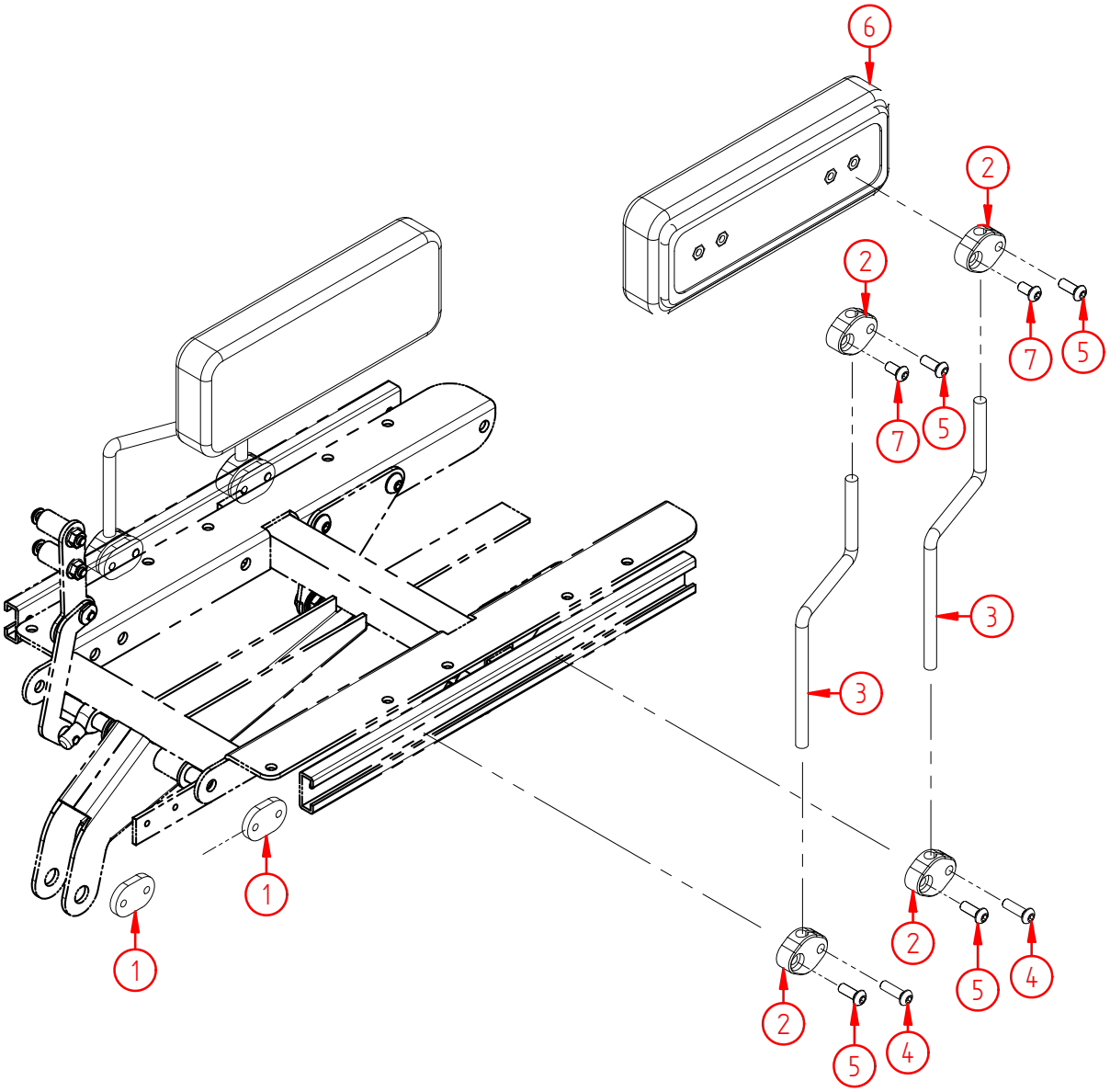

Product name:	**Support Pads, Knee/Thigh, Blue, 6x20 Junior**
Product no:	**HP20071123**
Product reference:	**Balder J**
Manufacturer:	Etac AS, www.etac.com
Revision:	**01.01.07**

Pos no.	Part no.	Qty	Description
1	10108	4	Nutplate, oval, 2-hole-M6
2	10114	8	Bracket, oval, clamp for bar Ø8
3	11585	4	Bar, knee/thigh pad, Junior
4	1346	4	Screw, hexagon socket pan head M6x20 DIN 7380 Elzink 10,9
5	1107	8	Screw, hexagon socket pan head M6x16 ISO7380 Elzink 10,9
6	11590	2	Cushion, blue, support pad knee/thigh, 6x20cm, Junior
7	1312	4	Screw, hexagon socket pan head M6x12 ISO7380 Elzink 10,9

Part no.	Qty	Description
.	.	.
.	.	.
.	.	.
.	.	.

Product name:	**Support Pads, Knee/Thigh, Green, 6x20 Junior**
Product no:	**HP20071124**
Product reference:	**Balder J**
Manufacturer:	Etac AS, www.etac.com
Revision:	**01.01.07**

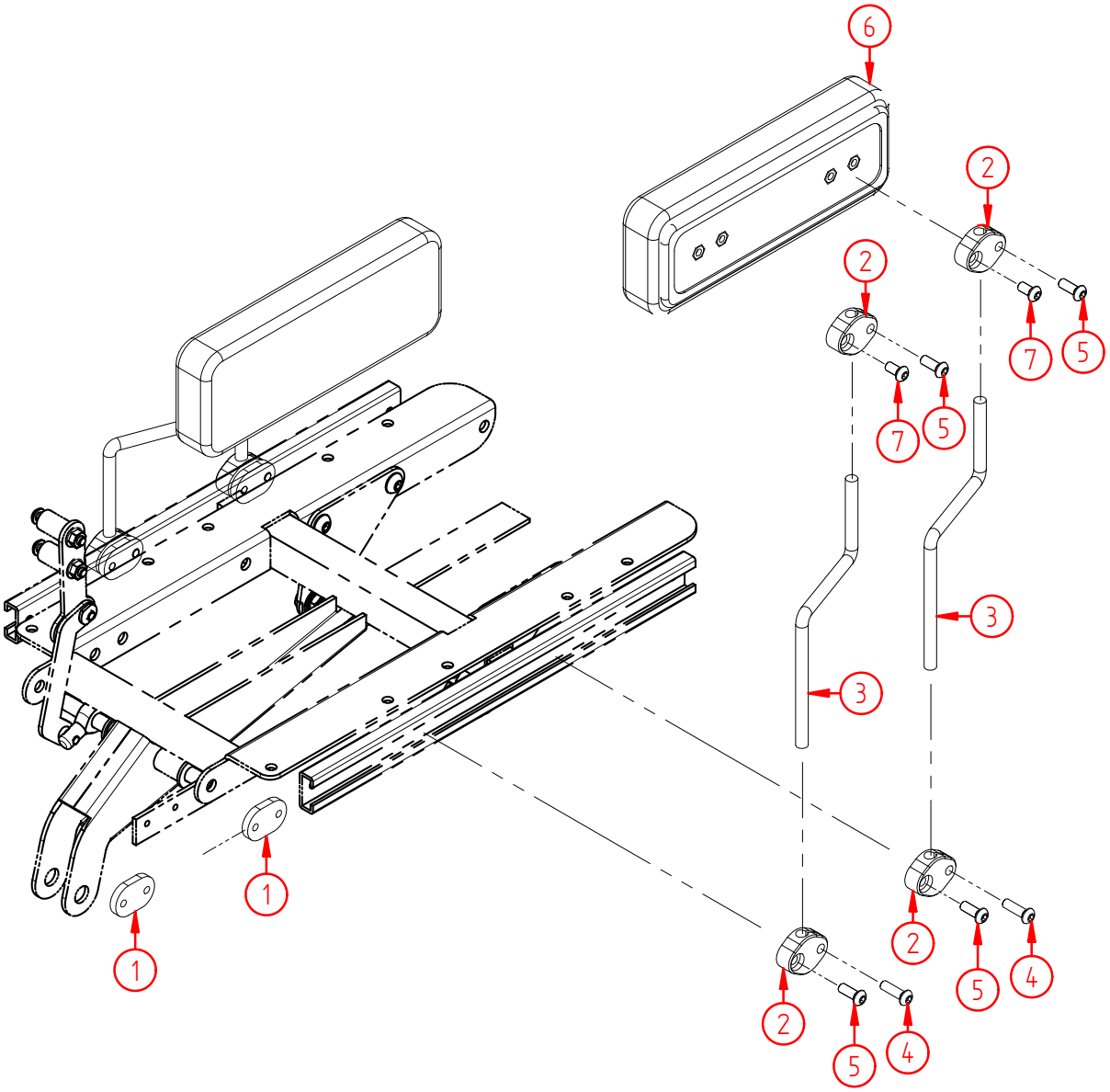

Product name:	**Support Pads, Knee/Thigh, Green, 6x20 Junior**
Product no:	**HP20071124**
Product reference:	**Balder J**
Manufacturer:	Etac AS, www.etac.com
Revision:	**01.01.07**

Pos no.	Part no.	Qty	Description
1	10108	4	Nutplate, oval, 2-hole-M6
2	10114	8	Bracket, oval, clamp for bar Ø8
3	11585	4	Bar, knee/thigh pad, Junior
4	1346	4	Screw, hexagon socket pan head M6x20 DIN 7380 Elzink 10,9
5	1107	8	Screw, hexagon socket pan head M6x16 ISO7380 Elzink 10,9
6	11591	2	Cushion, green, support pad knee/thigh, 6x20cm, Junior
7	1312	4	Screw, hexagon socket pan head M6x12 ISO7380 Elzink 10,9

Part no.	Qty	Description
.	.	.
.	.	.
.	.	.
.	.	.

Product name:	**Support Pads, Knee/Thigh, 10x15 Comfort**
Product no:	**HP20071125**
Product reference:	**Balder F/L**
Manufacturer:	Etac AS, www.etac.com
Revision:	**01.01.07**

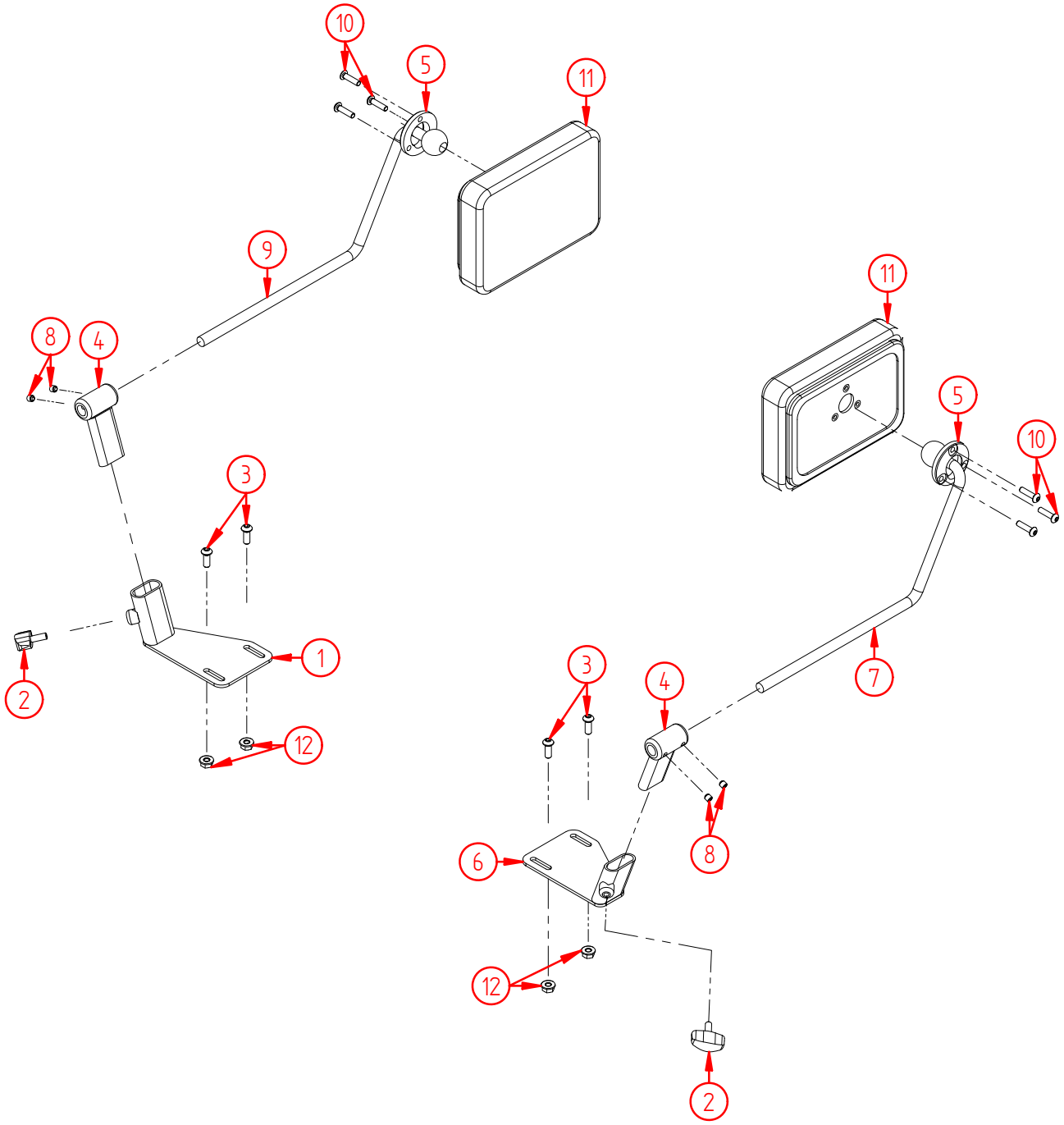

Product name:	**Support Pads, Knee/Thigh, 10x15 Comfort**
Product no:	**HP20071125**
Product reference:	**Balder F/L**
Manufacturer:	Etac AS, www.etac.com
Revision:	**01.01.07**

Pos no.	Part no.	Qty	Description
1	4571	1	Mountingbracket for kne/Thigh padleft F/L
2	000532	2	Locking lever M6x15
3	1107	4	Screw, hexagon socket pan head M6x16 ISO7380 Elzink 10,9
4	4572	2	Bracket, removable, kneesupport, F/L
5	3045	2	Clamping ring
6	4570	1	Mountingbracket for kne/Thigh padright, F/L
7	4914	1	Bar for knee/thight support, RH, F/L
8	4618	4	Screw, hexagon set, M6x6 DIN 916 Unplated
9	4569	1	Bar for knee/thight support, LH, F/L
10	4225	6	Screw, hexagon socket pan head M5x20 DIN 7380 Elzink 10,9
11	4573	2	Pad for knee/leg/seatback support, std fabric, 100x150mm F/L
12	1039	4	Nut, tensilock M6 DIN 6923 Goldfinish 8,8

Part no.	Qty	Description
.	.	.
.	.	.
.	.	.
.	.	.

Product name:	**Abduction pad, Removable, height adjustable, F/L**
Product no:	**HP20071126**
Product reference:	**Balder F/L**
Manufacturer:	**Etac AS, www.etac.com**
Revision:	**25.02.2011**

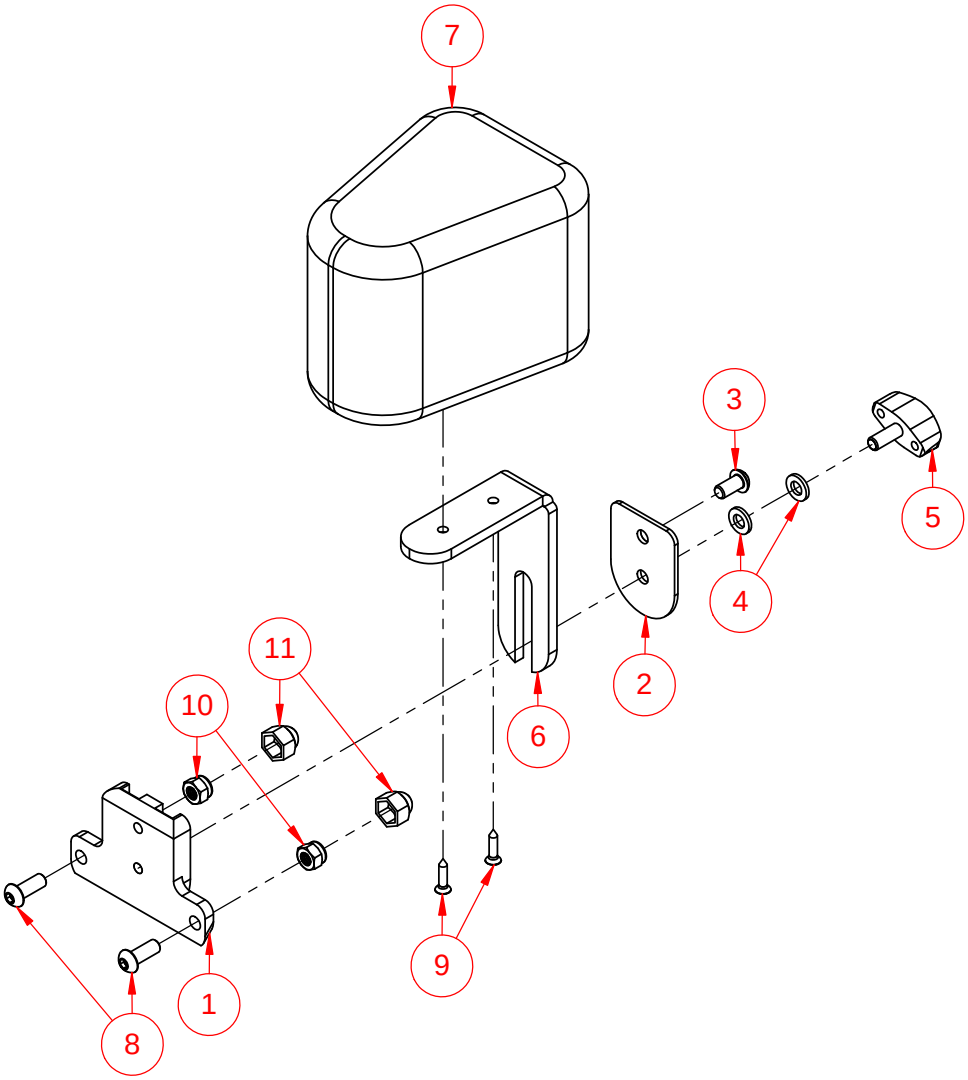

Product name:	**Abduction pad, Removable, height adjustable, F/L**
Product no:	**HP20071126**
Product reference:	**Balder F/L**
Manufacturer:	**Etac AS, www.etac.com**
Revision:	**25.02.2011**

Pos no.	Part no.	Qty	Description
1	11841	1	Bracket, fixation, abduction pad, height adjustable
2	11842	1	Locking plate, abduction pad, height adjustable
3	1312	1	Screw, hexagon socket pan head M6x12 ISO 7380 Elzink 10,9
4	1311	2	Washer M6 DIN 125 Elzink
5	000532	1	Locking lever M6x15
6	485245	1	Bracket, angle, abduction pad, black
7	316175112	1	Cushion, abd.pad, Cheetah
8	1107	2	Screw, hexagon socket pan head M6x16 ISO7380 Elzink 10,9
9	485158	2	Screw, Spax, countersunk 4,0x30mm, el.zinl
10	1157	2	Nut, nyloc M6 DIN 985 Elzink 8,8
11	1192	2	Nut cover BK10 M6

Product name:	**Knee-support Pad, Balder J240, complete**
Product no:	**HP20071128**
Product reference:	**Balder J240**
Manufacturer:	Etac AS, www.etac.com
Revision:	**01.01.07**

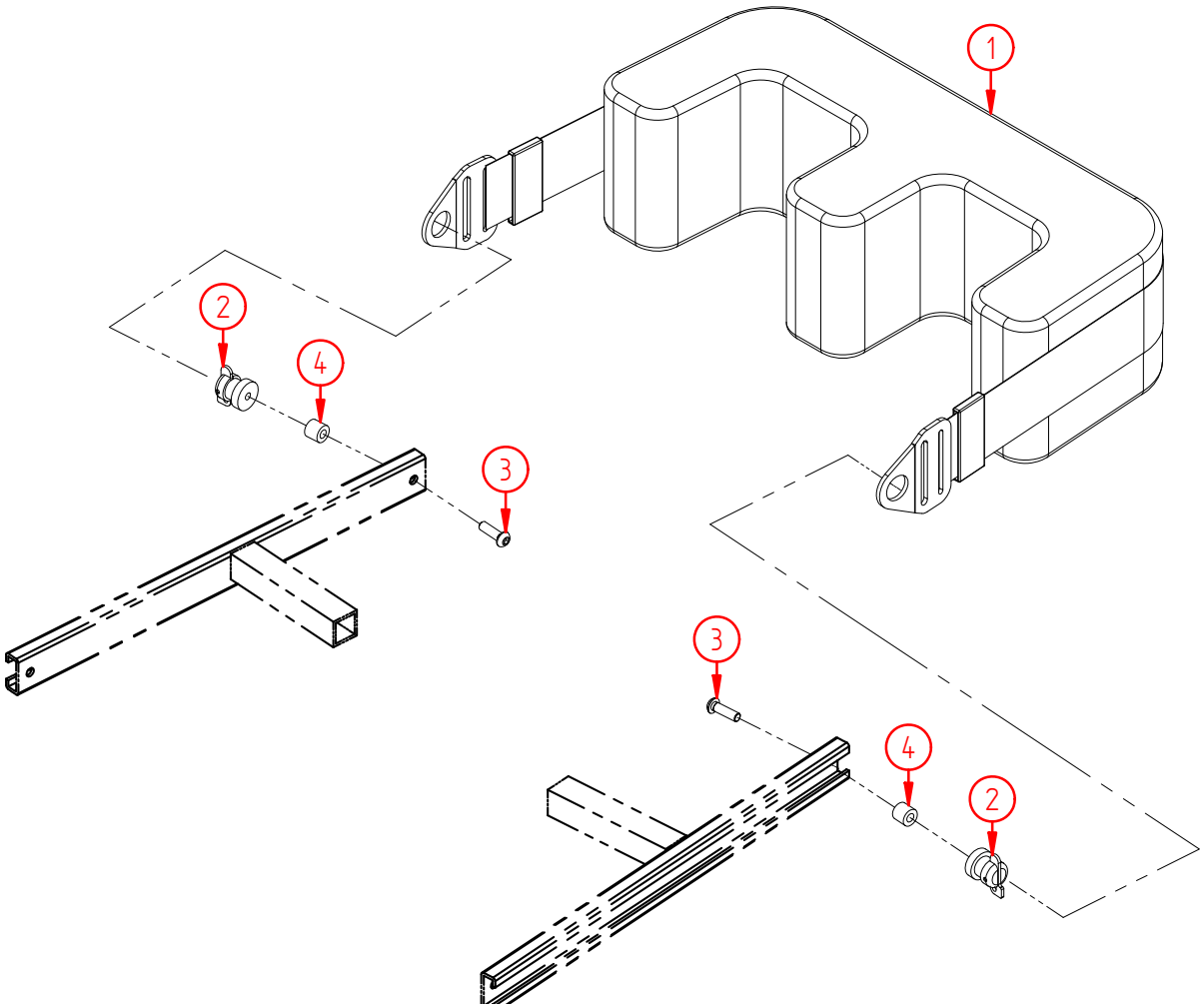

Product name:	**Knee-support Pad, Balder J240, complete**
Product no:	**HP20071128**
Product reference:	**Balder J240**
Manufacturer:	Etac AS, www.etac.com
Revision:	**01.01.07**

Pos no.	Part no.	Qty	Description
1	11051	1	Knee support, stand-up function,Junior, Comfort 1-2
2	4307	2	Straphook anchore Ø14, stand up function
3	1346	2	Screw, hexagon socket pan head M6x20 DIN 7380 Elzink 10,9
4	4263	2	Sleeve for wheel, legrest

Part no.	Qty	Description
.	.	.
.	.	.
.	.	.
.	.	.

Product name:	**Knee-support Pad w/ auto lock, Balder J240, complete**
Product no:	**HP20071129**
Product reference:	**Balder J240**
Manufacturer:	Etac AS, www.etac.com
Revision:	**01.01.07**

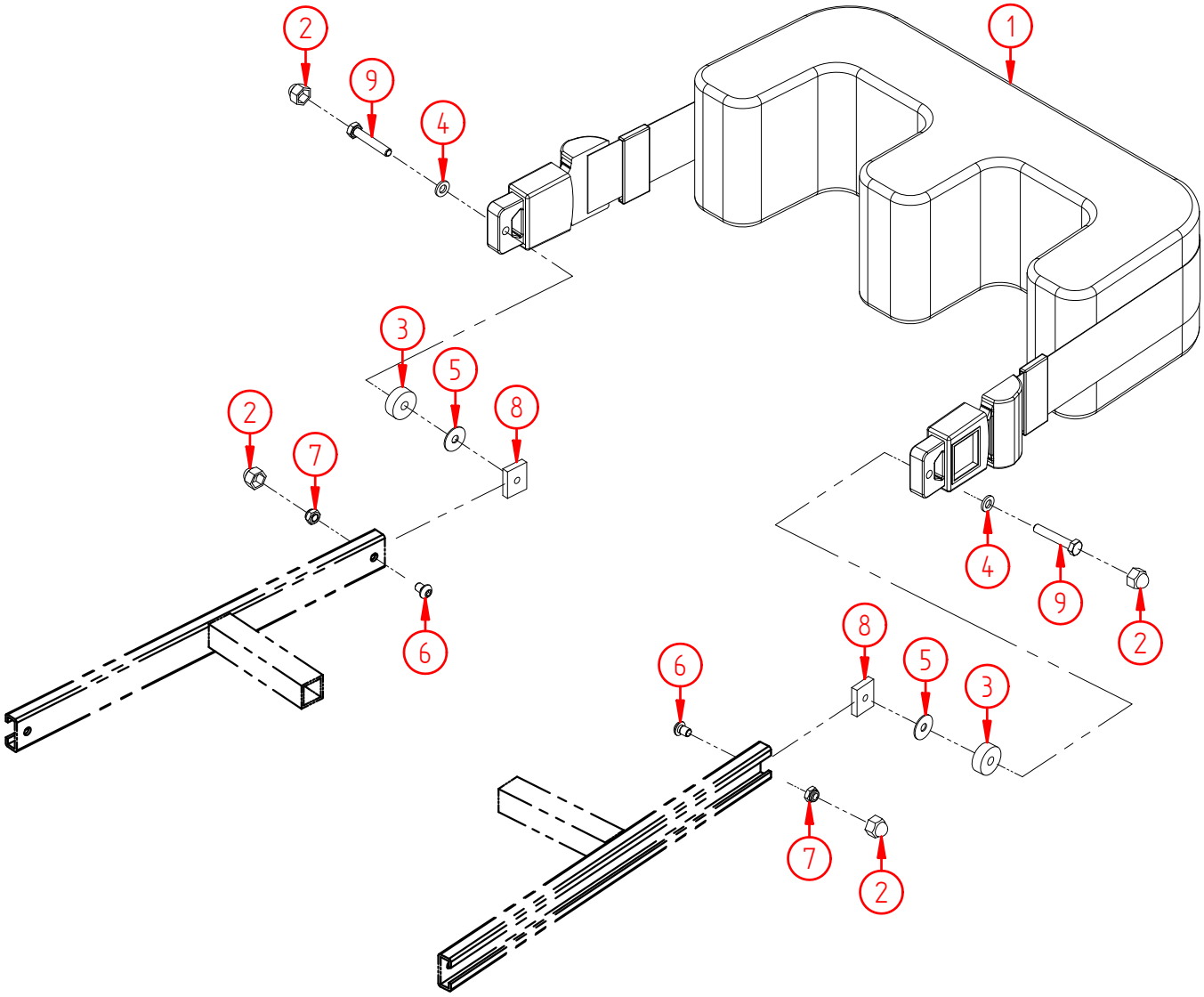

Product name:	**Knee-support Pad w/ auto lock, Balder J240, complete**
Product no:	**HP20071129**
Product reference:	**Balder J240**
Manufacturer:	Etac AS, www.etac.com
Revision:	**01.01.07**

Pos no.	Part no.	Qty	Description
1	11052	1	Knee support pad w/ auto lock, Junior, Comfort 1-2
2	1192	4	Nut cover BK10 M6
3	10020	2	Spacer, Black nylon, T22/08/6,5
4	1311	2	Washer M6 DIN 125 Elzink
5	1338	2	Washer M6x20 DIN 522 Elzink
6	1212	2	Screw, hexagon socket pan head M6x8 ISO7380 Elzink 10,9
7	1157	2	Nut, nylock M6 DIN 985 Elzink 8,8
8	10107	2	Nut, 23x18x5xM6, square, steel
9	000361	2	Screw, hexagon M6x35 DIN 933 Elzink 8,8

Part no.	Qty	Description
.	.	.
.	.	.
.	.	.
.	.	.

Product name:	**Knee-support Pad, Comfort 1-2, complete**
Product no:	**HP20071130**
Product reference:	**Balder F/L**
Manufacturer:	Etac AS, www.etac.com
Revision:	**01.01.07**

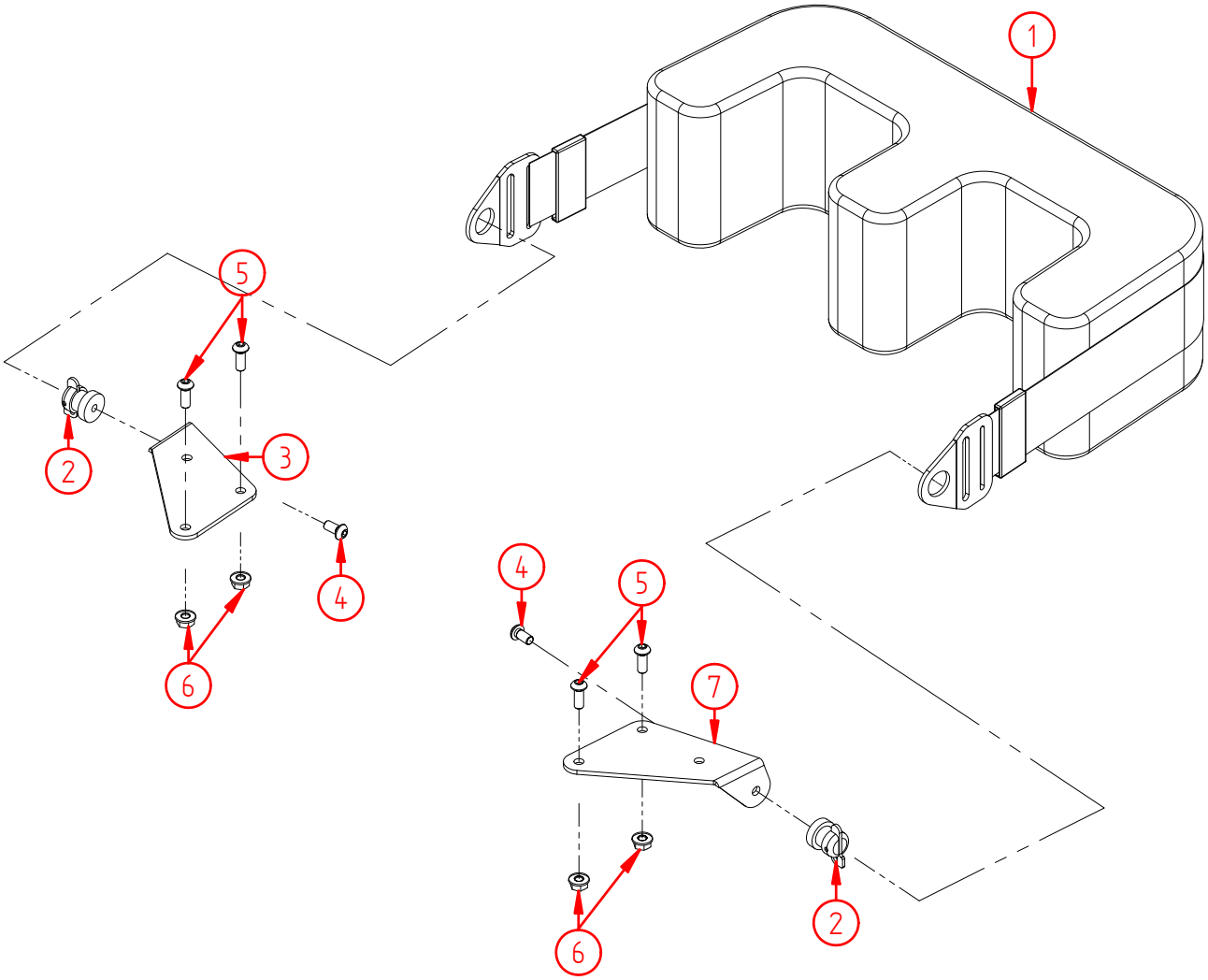

Product name:	**Knee-support Pad, Comfort 1-2, complete**
Product no:	**HP20071130**
Product reference:	**Balder F/L**
Manufacturer:	Etac AS, www.etac.com
Revision:	**01.01.07**

Pos no.	Part no.	Qty	Description
1	11051	1	Knee support, stand-up function, Junior, Comfort 1-2
2	4307	2	Straphook anchore Ø14, stand up function
3	4486	1	Bracket, straphook kneesupport, stans-up function, left
4	1312	2	Screw, hexagon socket pan head M6x12 ISO7380 Elzink 10,9
5	1107	4	Screw, hexagon socket pan head M6x16 ISO7380 Elzink 10,9
6	1039	4	Nut, tensilock M6 DIN 6923 Goldfinish 8,8
7	4485	1	Bracket, straphook kneesupport, stand-up function, right

Part no.	Qty	Description
.	.	.
.	.	.
.	.	.
.	.	.

Product name:	**Knee-support Pad w/ auto lock, Comfort 1-2, complete**
Product no:	**HP20071131**
Product reference:	**Balder F/L**
Manufacturer:	Etac AS, www.etac.com
Revision:	**01.01.07**

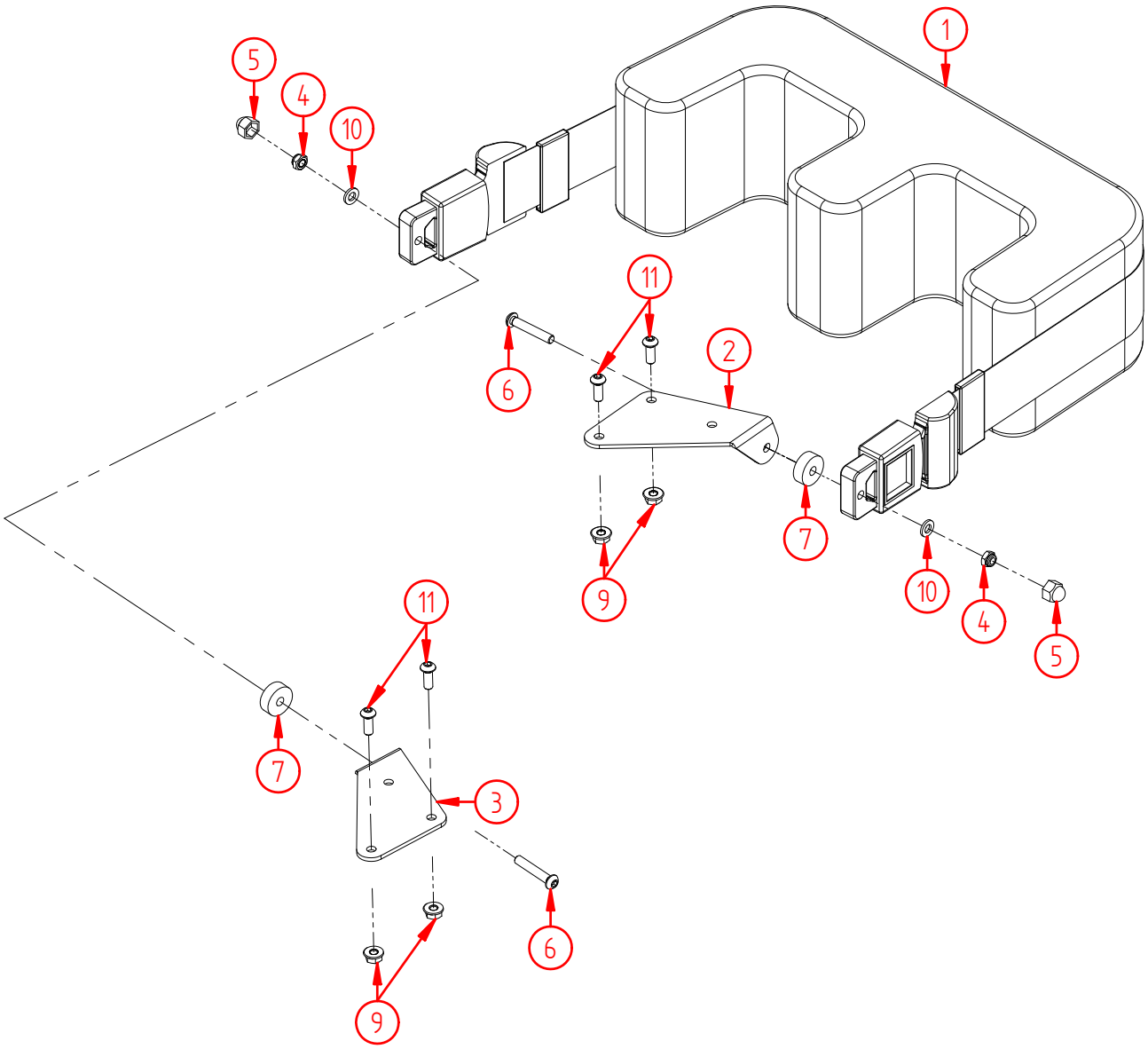

Product name:	**Knee-support Pad w/ auto lock, Comfort 1-2, complete**
Product no:	**HP20071131**
Product reference:	**Balder F/L**
Manufacturer:	Etac AS, www.etac.com
Revision:	**01.01.07**

Pos no.	Part no.	Qty	Description
1	11052	1	Knee support pad w/ auto lock, Junior, Comfort 1-2
2	4485	1	Bracket, straphook kneesupport, stand-up function, right
3	4486	1	Bracket, straphook kneesupport, stans-up function, left
4	1157	2	Nut, nylock M6 DIN 985 Elzink 8,8
5	1192	2	Nut cover BK10 M6
6	4387	2	Screw, hexagon socket pan head M6x35 DIN 7380 Elzink 8,8
7	10020	2	Spacer, Black nylon, T22/08/6,5
9	1039	4	Nut, tensilock M6 DIN 6923 Goldfinish 8,8
10	1311	2	Washer M6 DIN 125 Elzink
11	1107	4	Screw, hexagon socket pan head M6x16 ISO7380 Elzink 10,9

Part no.	Qty	Description
.	.	.
.	.	.
.	.	.
.	.	.

Product name:	**Knee-support Pad, Comfort 3-6, complete**
Product no:	**HP20071132**
Product reference:	**Balder F/L**
Manufacturer:	Etac AS, www.etac.com
Revision:	**01.01.07**

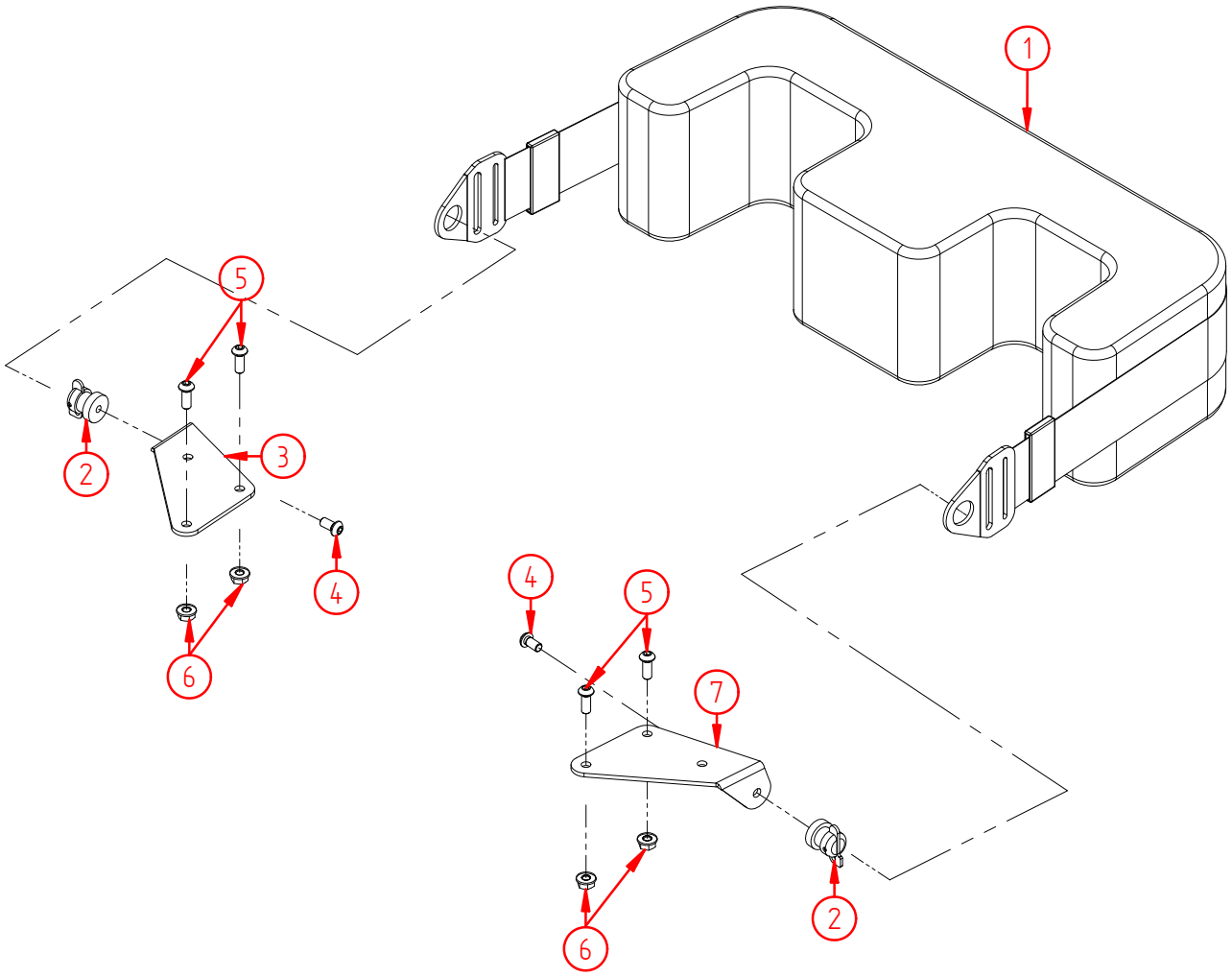

Product name:	**Knee-support Pad, Comfort 3-6, complete**
Product no:	**HP20071132**
Product reference:	**Balder F/L**
Manufacturer:	Etac AS, www.etac.com
Revision:	**01.01.07**

Pos no.	Part no.	Qty	Description
1	1272	1	Knee support, stand-up function,Comfort 3-6
2	4307	2	Straphook anchore Ø14, stand up function
3	4486	1	Bracket, straphook kneesupport, stans-up function, left
4	1312	2	Screw, hexagon socket pan head M6x12 ISO7380 Elzink 10,9
5	1107	4	Screw, hexagon socket pan head M6x16 ISO7380 Elzink 10,9
6	1039	4	Nut, tensilock M6 DIN 6923 Goldfinish 8,8
7	4485	1	Bracket, straphook kneesupport, stand-up function,right

Part no.	Qty	Description
.	.	.
.	.	.
.	.	.
.	.	.

Product name:	**Knee-support Pad w/ auto lock, Comfort 3-6, complete**
Product no:	**HP20071133**
Product reference:	**Balder F/L**
Manufacturer:	Etac AS, www.etac.com
Revision:	**01.01.07**

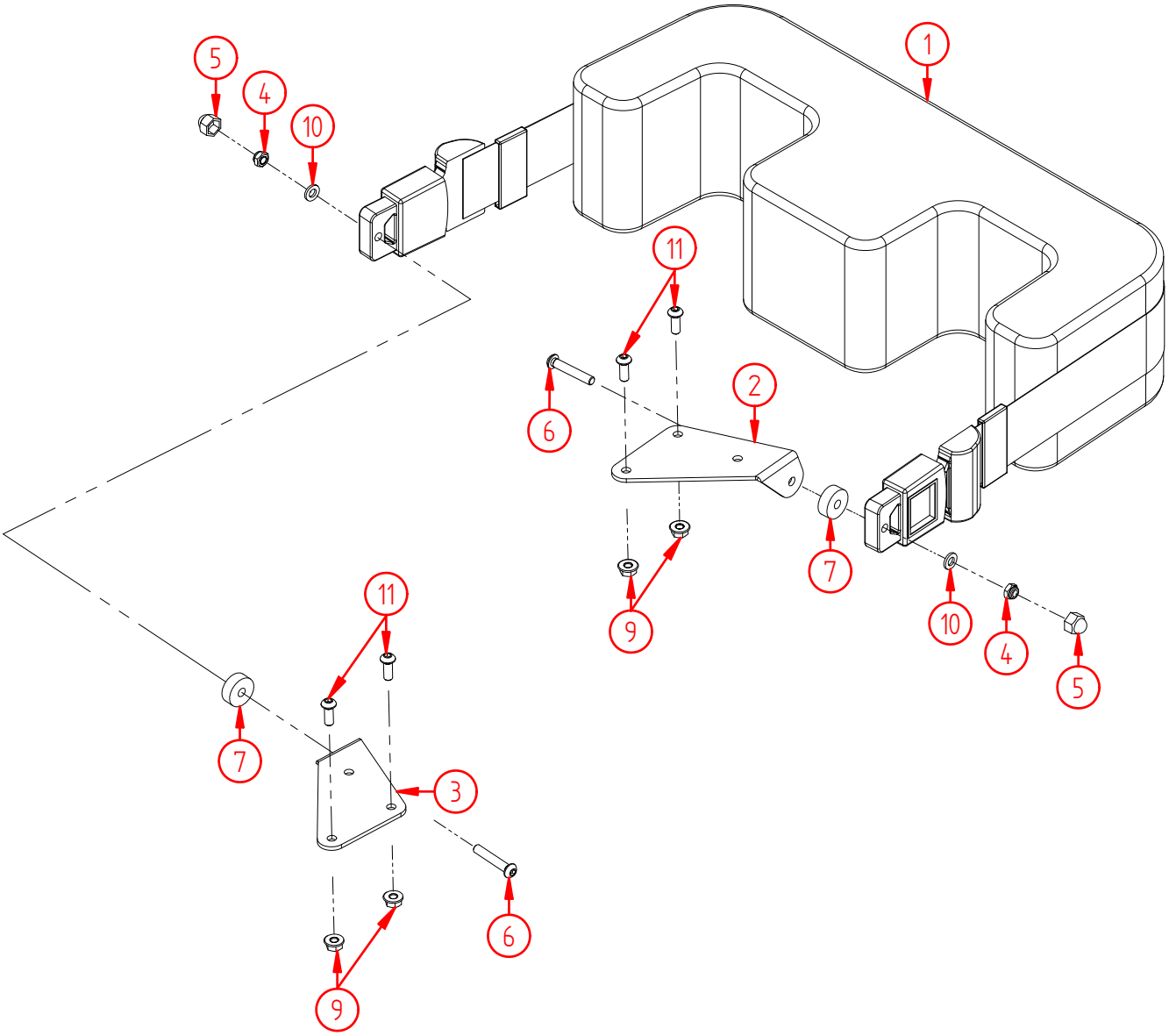

Product name:	**Knee-support Pad w/ auto lock, Comfort 3-6, complete**
Product no:	**HP20071133**
Product reference:	**Balder F/L**
Manufacturer:	Etac AS, www.etac.com
Revision:	**01.01.07**

Pos no.	Part no.	Qty	Description
1	10194	1	Knee support pad w/ auto lock Comfort 3-6
2	4485	1	Bracket, straphook kneesupport, stand-up function, right
3	4486	1	Bracket, straphook kneesupport, stans-up function, left
4	1157	2	Nut, nylock M6 DIN 985 Elzink 8,8
5	1192	2	Nut cover BK10 M6
6	4387	2	Screw, hexagon socket pan head M6x35 DIN 7380 Elzink 8,8
7	10020	2	Spacer, Black nylon, T22/08/6,5
9	1039	4	Nut, tensilock M6 DIN 6923 Goldfinish 8,8
10	1311	2	Washer M6 DIN 125 Elzink
11	1107	4	Screw, hexagon socket pan head M6x16 ISO7380 Elzink 10,9

Part no.	Qty	Description
.	.	.
.	.	.
.	.	.
.	.	.

Product name:	**Main circuit switch, Balder F/J**
Product no:	**HP20071134**
Product reference:	**Balder F/J**
Manufacturer:	Etac AS, www.etac.com
Revision:	**01.01.07**

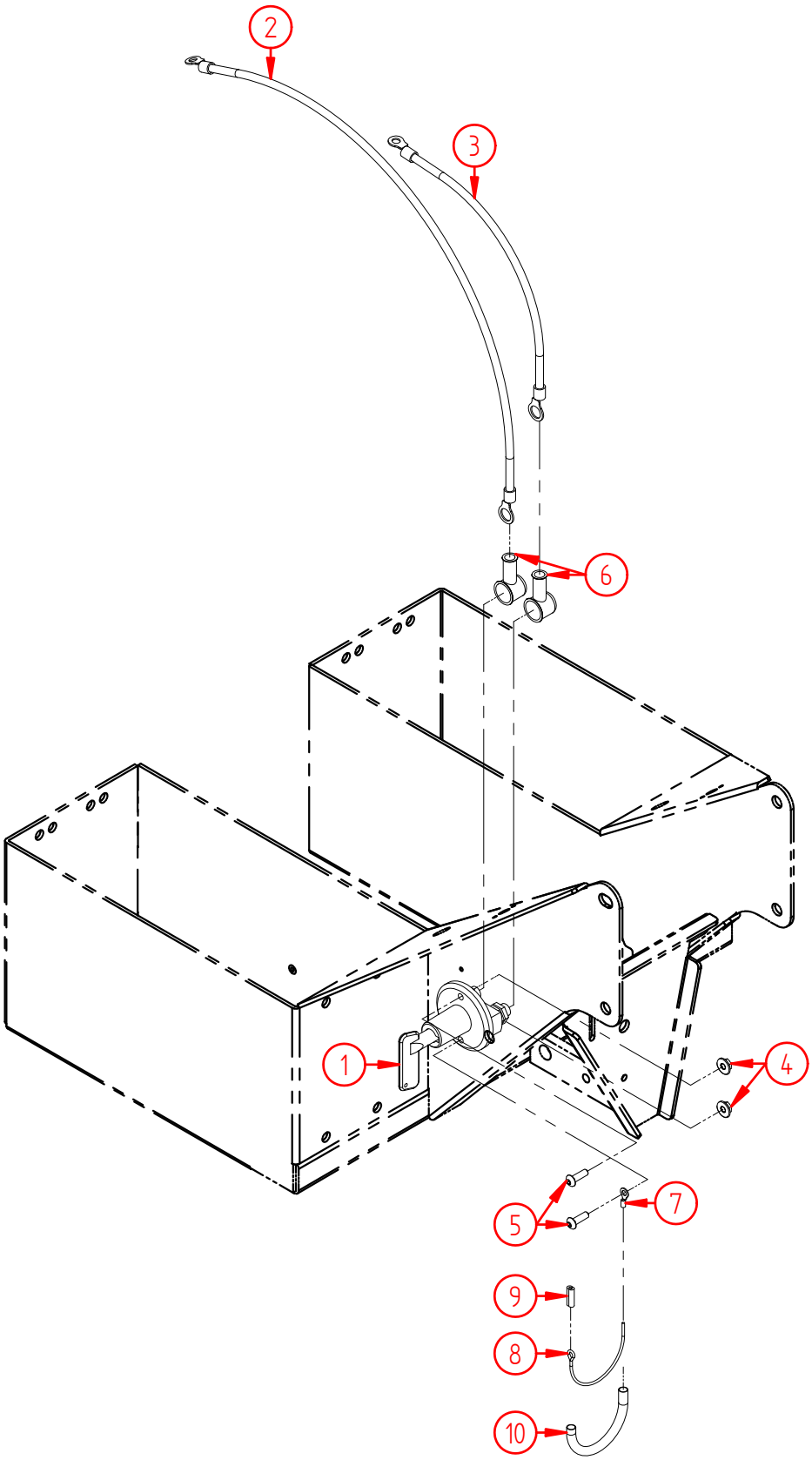

Product name:	**Main circuit switch, Balder F/J**
Product no:	**HP20071134**
Product reference:	**Balder F/J**
Manufacturer:	Etac AS, www.etac.com
Revision:	**01.01.07**

Pos no.	Part no.	Qty	Description
1	8628	1	Main current switch
2	11102	1	Cable Main Circuit Swtich L:50cm
3	11101	1	Cable Main Circuit Swtich L:25cm
4	1189	2	Nut, tensilock M5 DIN 6923 Goldfinish 8.8
5	4401	2	Screw, hexagon socket pan head M5x16 ISO7380 Elzink 10,9
6	10921	2	Isolationcap, rubber, 90 degrees Ø8/15mm
7	10744	1	Cable eye, uninsulated , 0,5-1,5mm2
8	4359	1	Cable Zebra 1x0,75mm2, Black
9	11017	1	Wireclamp, 1,5mm
10	2453	1	Heat-shrinkable tubing 4,8/2,4-10m

Part no.	Qty	Description
.	.	.
.	.	.
.	.	.
.	.	.

Product name:	**Main circuit switch, Balder L**
Product no:	**HP20071135**
Product reference:	**Balder L**
Manufacturer:	Etac AS, www.etac.com
Revision:	**01.01.07**

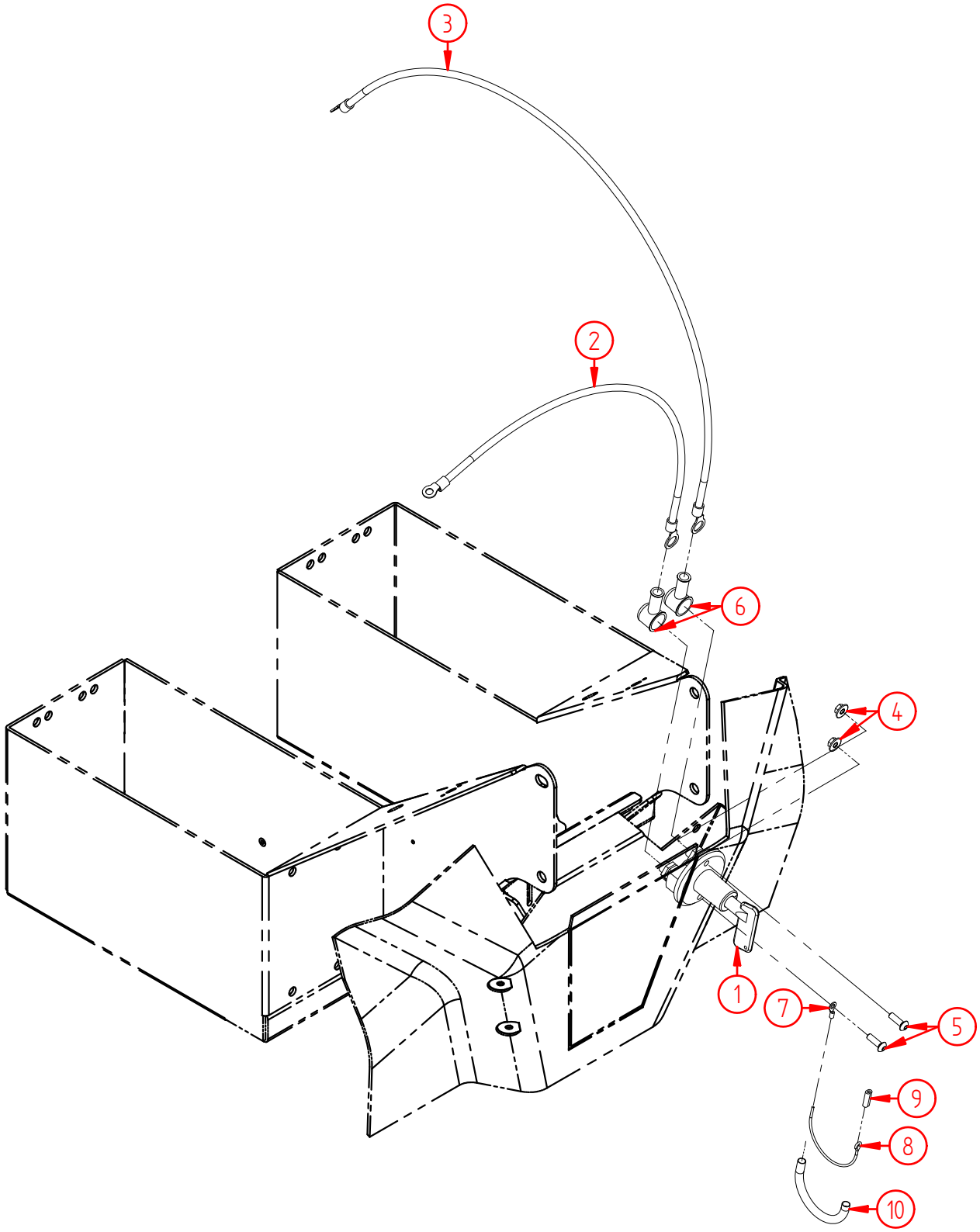

Product name:	**Main circuit switch, Balder L**
Product no:	**HP20071135**
Product reference:	**Balder L**
Manufacturer:	Etac AS, www.etac.com
Revision:	**01.01.07**

Pos no.	Part no.	Qty	Description
1	8628	1	Main current switch
2	11102	1	Cable Main Circuit Swtich L:50cm
3	11103	1	Cable Main Circuit Swtich L:70cm
4	1189	2	Nut, tensilock M5 DIN 6923 Goldfinish 8.8
5	4401	2	Screw, hexagon socket pan head M5x16 ISO7380 Elzink 10,9
6	10921	2	Isolationcap, rubber, 90 degrees Ø8/15mm
7	10744	1	Cable eye, uninsulated , 0,5-1,5mm2
8	4359	1	Cable Zebra 1x0,75mm2, Black
9	11017	1	Wireclamp, 1,5mm
10	2453	1	Heat-shrinkable tubing 4,8/2,4-10m

Part no.	Qty	Description
.	.	.
.	.	.
.	.	.
.	.	.

Product name:	**Emergency stop switch, Balder F/L/J**
Product no:	**HP20071136**
Product reference:	**Balder F/L**
Manufacturer:	Etac AS, www.etac.com
Revision:	**01.01.07**

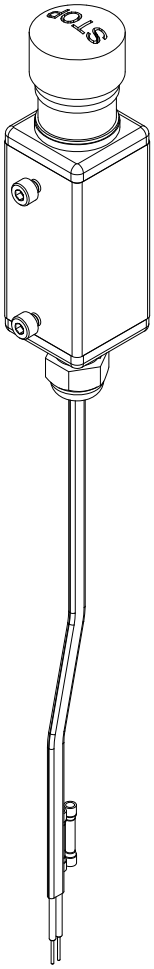

Product name:	**Mirror, foldable, right hand, complete, Balder F/L/J**
Product no:	**HP20071137**
Product reference:	**Balder F/L/J**
Manufacturer:	Etac AS, www.etac.com
Revision:	**22.06.07**

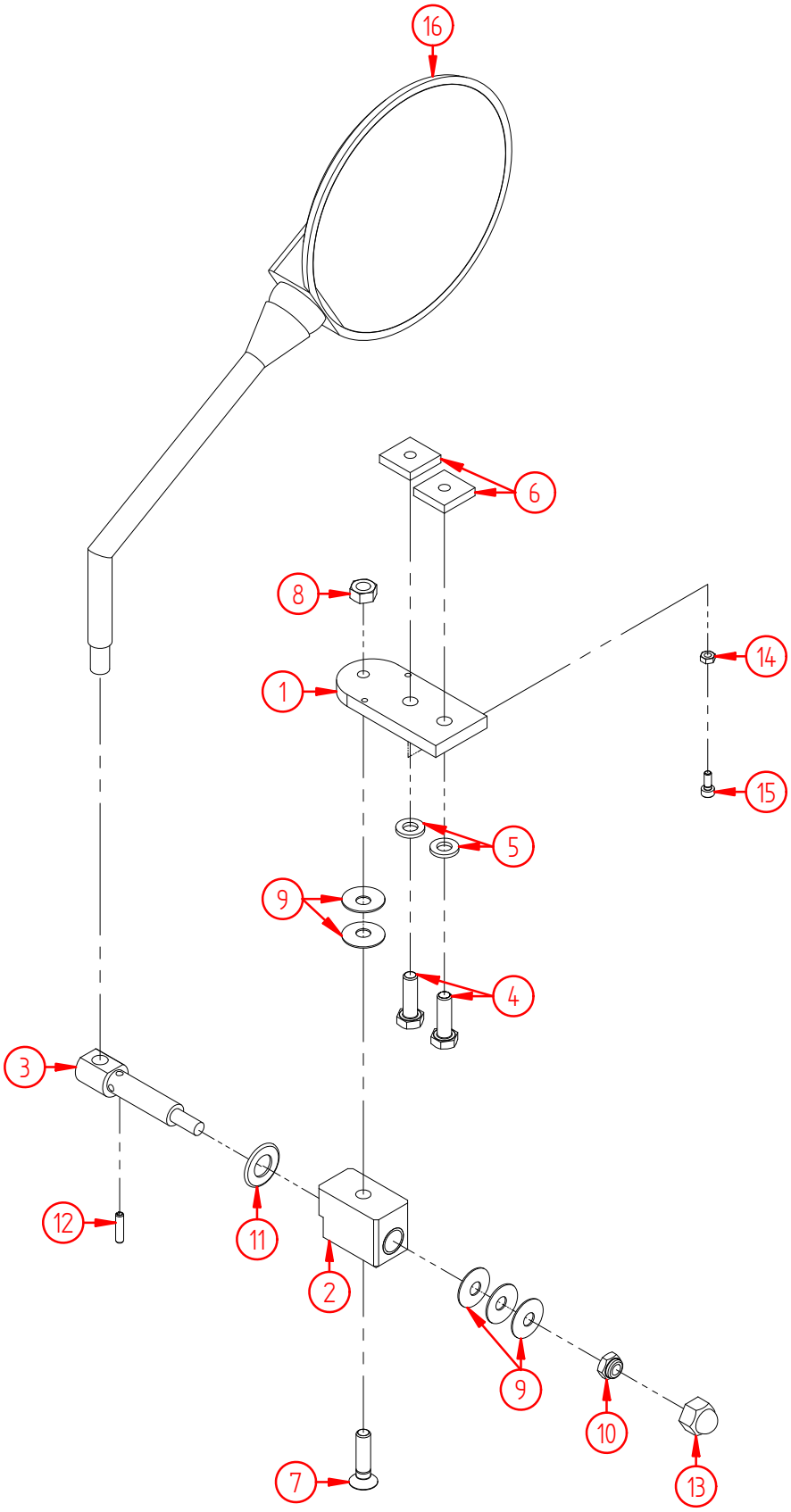

Product name:	**Mirror, foldable, right hand, complete, Balder F/L/J**
Product no:	**HP20071137**
Product reference:	**Balder F/L/J**
Manufacturer:	Etac AS, www.etac.com
Revision:	**22.06.07**

Pos no.	Part no.	Qty	Description
1	9382	1	Bracket, main for mirror F/L
2	9384	1	Link, mirrorbracket F/L
3	9383	1	Axel, mirrorbracket F/L
4	1156	2	Screw, hexagon M6x20 DIN 933 Elzink 8,8
5	1311	2	Washer M6 DIN 125 Elzink
6	1276	2	Nut 18x18x4xM6, square, steel
7	9421	1	Screw, hexagon socket countersunk M6x25 DIN 7991 Elzink 8,8
8	1089	1	Nut M6 DIN 934 Elzink
9	4788	5	Diskspring SF-TAF 18x6, 2x0,7
10	1157	1	Nut, nylock M6 DIN 985 Elzink 8,8
11	9584	1	Washer, black pom, Ø20xØ10,2x1mm
12	2468	1	Splint pipe 3x14 DIN 1481 Unplated
13	1192	1	Nut cover BK10 M6
14	2493	1	Nut M3 DIN 934 Elzink
15	4380	1	Screw, hexagon socket M3x8 DIN 912 Elzink 8,8
16	000638	1	Mirror for Balder

Part no.	Qty	Description
.	.	.
.	.	.
.	.	.
.	.	.

Product name:	**Mirror, foldable, left hand, complete, Balder F/L/J**
Product no:	**HP20071138**
Product reference:	**Balder F/L/J**
Manufacturer:	Etac AS, www.etac.com
Revision:	**22.06.07**

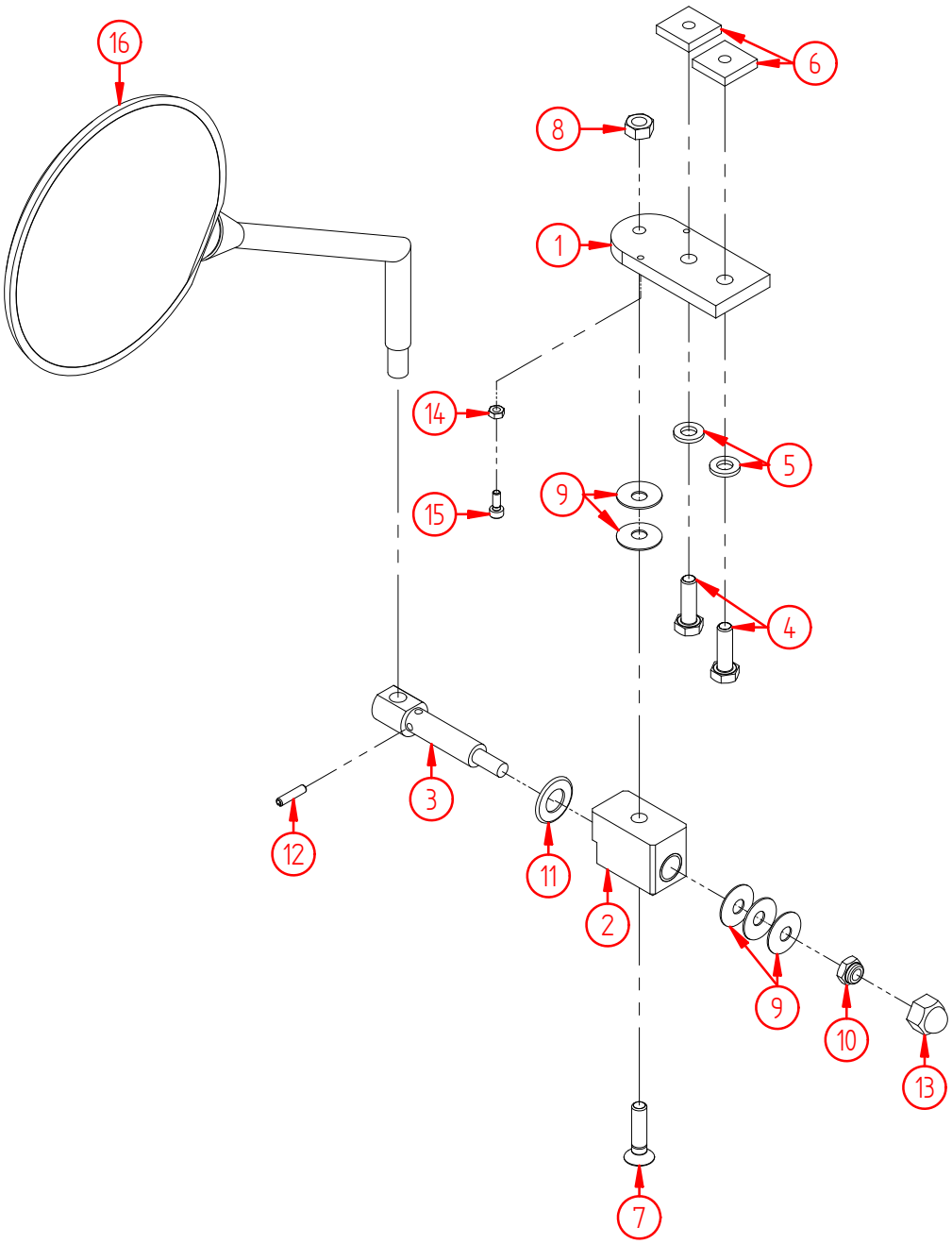

Product name:	**Mirror, foldable, left hand, complete, Balder F/L/J**
Product no:	**HP20071138**
Product reference:	**Balder F/L/J**
Manufacturer:	Etac AS, www.etac.com
Revision:	**22.06.07**

Pos no.	Part no.	Qty	Description
1	9382	1	Bracket, main for mirror F/L
2	9384	1	Link, mirrorbracket F/L
3	9383	1	Axel, mirrorbracket F/L
4	1156	2	Screw, hexagon M6x20 DIN 933 Elzink 8,8
5	1311	2	Washer M6 DIN 125 Elzink
6	1276	2	Nut 18x18x4xM6, square, steel
7	9421	1	Screw, hexagon socket countersunk M6x25 DIN 7991 Elzink 8,8
8	1089	1	Nut M6 DIN 934 Elzink
9	4788	5	Diskspring SF-TAF 18x6, 2x0,7
10	1157	1	Nut, nylock M6 DIN 985 Elzink 8,8
11	9584	1	Washer, black pom, Ø20xØ10,2x1mm
12	2468	1	Splint pipe 3x14 DIN 1481 Unplated
13	1192	1	Nut cover BK10 M6
14	2493	1	Nut M3 DIN 934 Elzink
15	4380	1	Screw, hexagon socket M3x8 DIN 912 Elzink 8,8
16	000638	1	Mirror for Balder

Part no.	Qty	Description
.	.	.
.	.	.
.	.	.
.	.	.

Product name:	**Anti Crush Guard, Balder F/J**
Product no:	**HP20071139**
Product reference:	**Balder F/J**
Manufacturer:	Etac AS, www.etac.com
Revision:	**01.01.07**

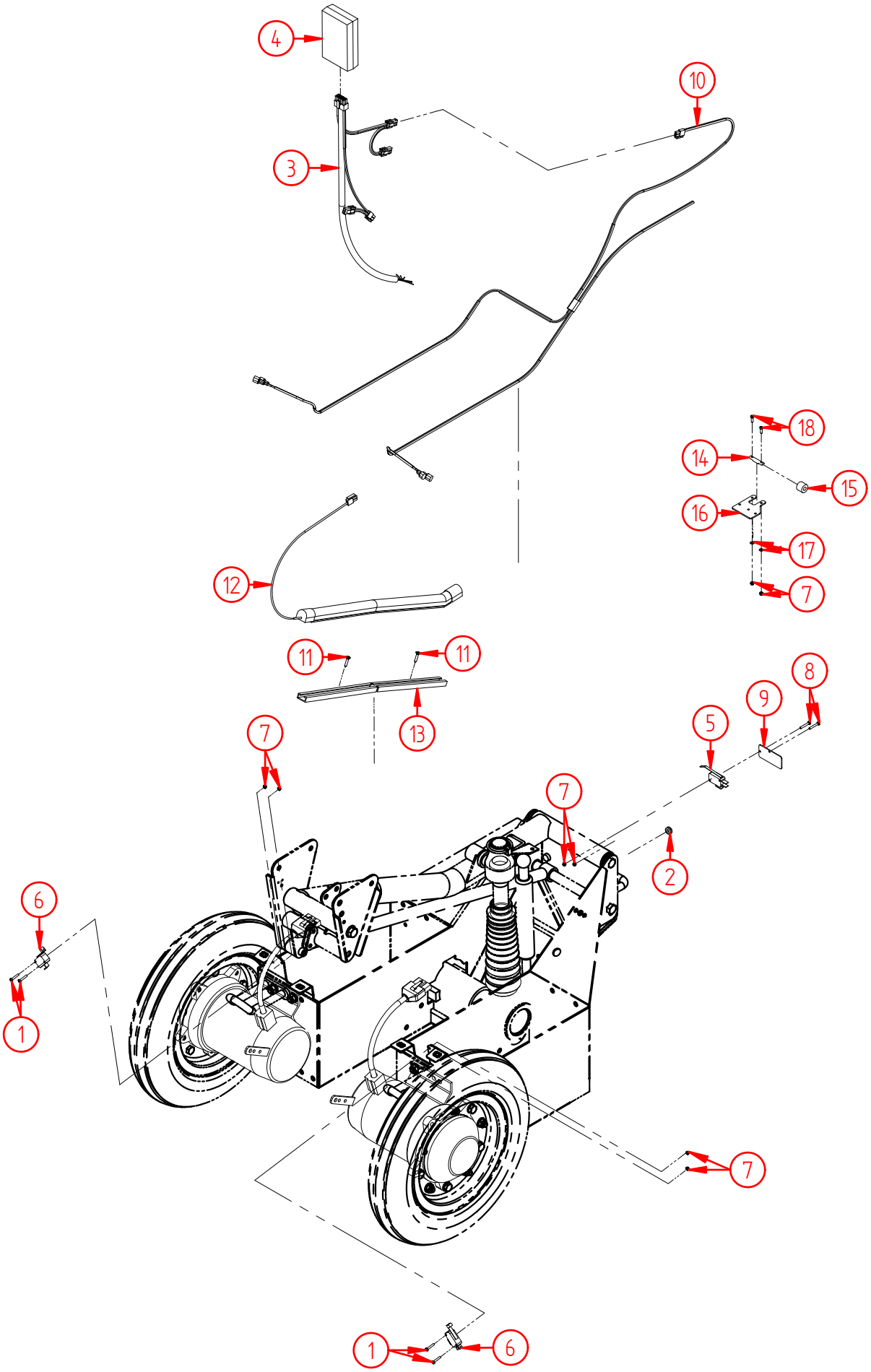

Product name:	**Anti Crush Guard, Balder F/J**
Product no:	**HP20071139**
Product reference:	**Balder F/J**
Manufacturer:	Etac AS, www.etac.com
Revision:	**01.01.07**

Pos no.	Part no.	Qty	Description
1	1353	4	Screw, cross slotted, pan head M3x16 DIN 7985 Elzink
2	10694	1	Rubber grommet DA 48/80/30
3	10730	1	Cable set, electronic, anti crush guard, F/L/J
4	10729	1	Electronic, anti crush guard Balder F/L/J
5	10965	1	Microswitch, anti crush guard F, backplate
6	9559	2	Microswitch XGK2-S21
7	1188	8	Nut, nylock M3 DIN 985 Elzink 8,8
8	9558	2	Screw, cross slotted, pan head M3x20 DIN 7985 Elzink
9	10650	1	Cover, microswitch Omron V-163-1C5
10	10731	1	Cabel set, switches anticrush guard, F/J
11	2820	2	Skrew, plate M3,5x19 DIN 7983
12	11114	1	Anti crush rubber moulding, lift arm, F/L/J
13	11111	1	Rail, aluminium, Anti Crush Guard F/L/J
14	11113	1	Axel, plate for the end limit switches, F/L/J, for wheel
15	11030	1	Spacer, Black plastic, T15/12/6,5
16	11112	1	Plate for the end limit switches, F/L/J, for wheel
17	4751	2	Washer M3 DIN 125 Elzink
18	2802	2	Screw M3x10, straight track DIN 84 Elzink

Part no.	Qty	Description
.	.	.
.	.	.
.	.	.
.	.	.

Product name:	**Anti Crush Guard, Balder L**
Product no:	**HP20071140**
Product reference:	**Balder L**
Manufacturer:	Etac AS, www.etac.com
Revision:	**01.01.07**

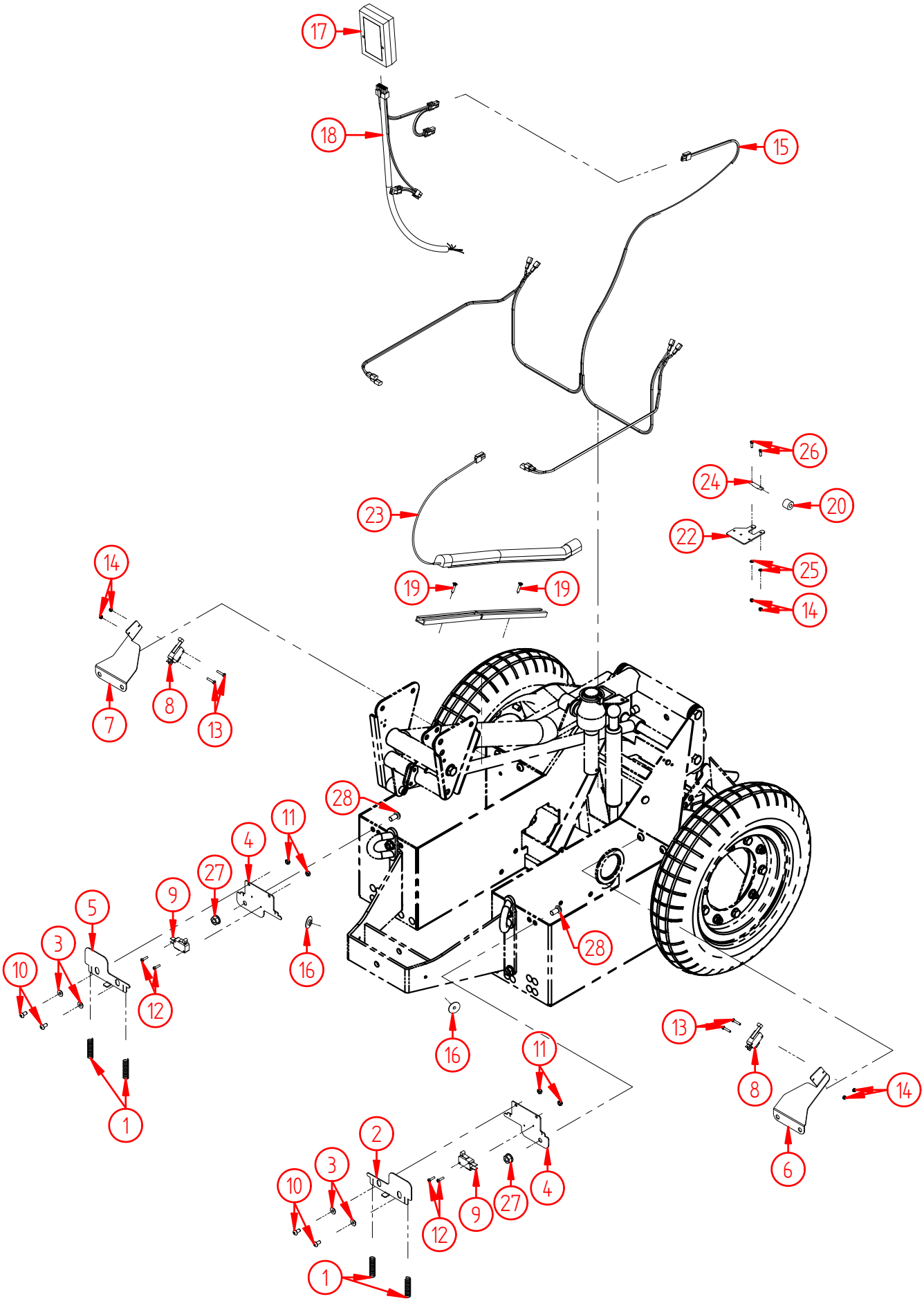

Product name:	**Anti Crush Guard, Balder L**
Product no:	**HP20071140**
Product reference:	**Balder L**
Manufacturer:	Etac AS, www.etac.com
Revision:	**01.01.07**

Pos no.	Part no.	Qty	Description
1	11122	4	Spring SF-TFR 1x8x40
2	11118	1	Switch lever, front, LH, anti crush guard L
3	11115	4	Washer, bracket front, anti crush guard L
4	11116	2	Bracket, front switch, anti crush guard L
5	11117	1	Switch lever, front, RH, anti crush guard L
6	11120	1	Bracket, rear switch, RH, anti crush guard L
7	11121	1	Bracket, rear switch, LH, anti crush guard L
8	9559	2	Microswitch XGK2-S21
9	10968	2	Micro switch, OMRON D3V-165-1C5
10	4402	4	Screw, hexagon socket pan head M5x10 ISO 7380 Elzink 10,9
11	1190	4	Nut, nylock M5 DIN 985 Elzink 8,8
12	000651	4	Machine screw M3x12 DIN7985 Elzink
13	1353	4	Screw, cross slotted, pan head M3x16 DIN 7985 Elzink
14	1188	6	Nut, nylock M3 DIN 985 Elzink 8,8
15	10732	1	cable set, switches, anti crush guard, L
16	11119	2	Washer, bodymoulding front , anti crush guard L
17	10729	1	Electronic, anti crush guard Balder F/L/J
18	10730	1	Cable set, electronic, anti crush guard, F/L/J
19	2820	2	Skrew, plate M3,5x19 DIN 7983
20	11030	1	Spacer, Black plastic, T15/12/6,5
21	11111	1	Rail, aluminium, Anti Crush Guard F/L/J
22	11112	1	Plate for the end limit switches, F/L/J, for wheel
23	11114	1	Anti crush rubber moulding, lift arm, F/L/J
24	11113	1	Axel, plate for the end limit switches, F/L/J, for wheel
25	4751	2	Washer M3 DIN 125 Elzink
26	2802	2	Screw M3x10, straight track DIN 84 Elzink
27	1126	2	Nut, tensilock M8 DIN 6923 Goldfinish 8,8
28	1213	2	Screw, hexagon socket pan head M8x16 DIN 7380 Elzink 8,8

Part no.	Qty	Description
.	.	.
.	.	.
.	.	.
.	.	.

Product name:	**Seat stabilizer unit, Balder F**
Product no:	**HP20071141**
Product reference:	**Balder F/L**
Manufacturer:	Etac AS, www.etac.com
Revision:	**01.01.07**

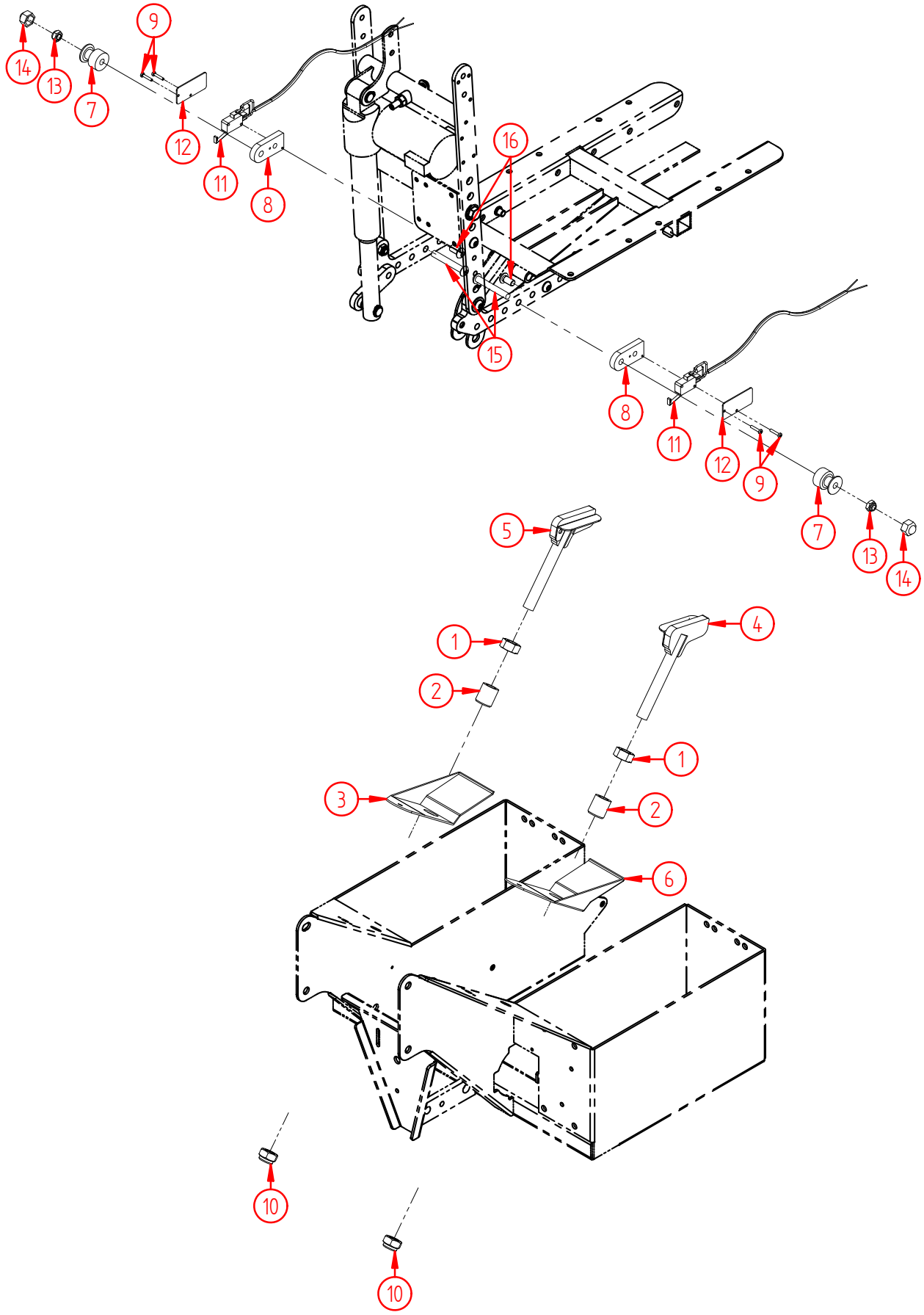

Product name:	**Seat stabilizer unit, Balder F**
Product no:	**HP20071141**
Product reference:	**Balder F/L**
Manufacturer:	Etac AS, www.etac.com
Revision:	**01.01.07**

Pos no.	Part no.	Qty	Description
1	2478	2	Nut M14 DIN 934 Elzink
2	10641	2	Sleeve, seat stabilizer F
3	10642	1	Cover, seat stabilizer F, LH
4	10643	1	Main am, seat stabilizer F, RH
5	10644	1	Main am, seat stabilizer F, LH
6	10645	1	Cover, seat stabilizer F, RH
7	10646	2	Main sleeve, seat stabilizer F
8	10647	2	Plate, main sleeve, seat stabilizer F
9	1353	4	Screw, cross slotted, pan head M3x16 DIN 7985 Elzink
10	10648	2	Nut, nylock M14 DIN 985 Elzink 8,8
11	10649	2	Microswitch, seat stabilizer F, complete
12	10650	2	Cover, microswitch Omron V-163-1C5
13	1070	2	Nut, nylock M8 DIN 985 El.zink 8,8
14	3759	2	Nut cover BK13 M8
15	9419	2	Screw, hexagon socket pan head M8x55 DIN 7380 Elzink 8,8
16	1213	2	Screw, hexagon socket pan head M8x16 DIN 7380 Elzink 8,8

Part no.	Qty	Description
.	.	.
.	.	.
.	.	.
.	.	.

Product name:	**Platform for breathing device (B:30cm D:25cm), F/J**
Product no:	**HP20071143**
Product reference:	**Balder F/L**
Manufacturer:	Etac AS, www.etac.com
Revision:	**01.01.07**

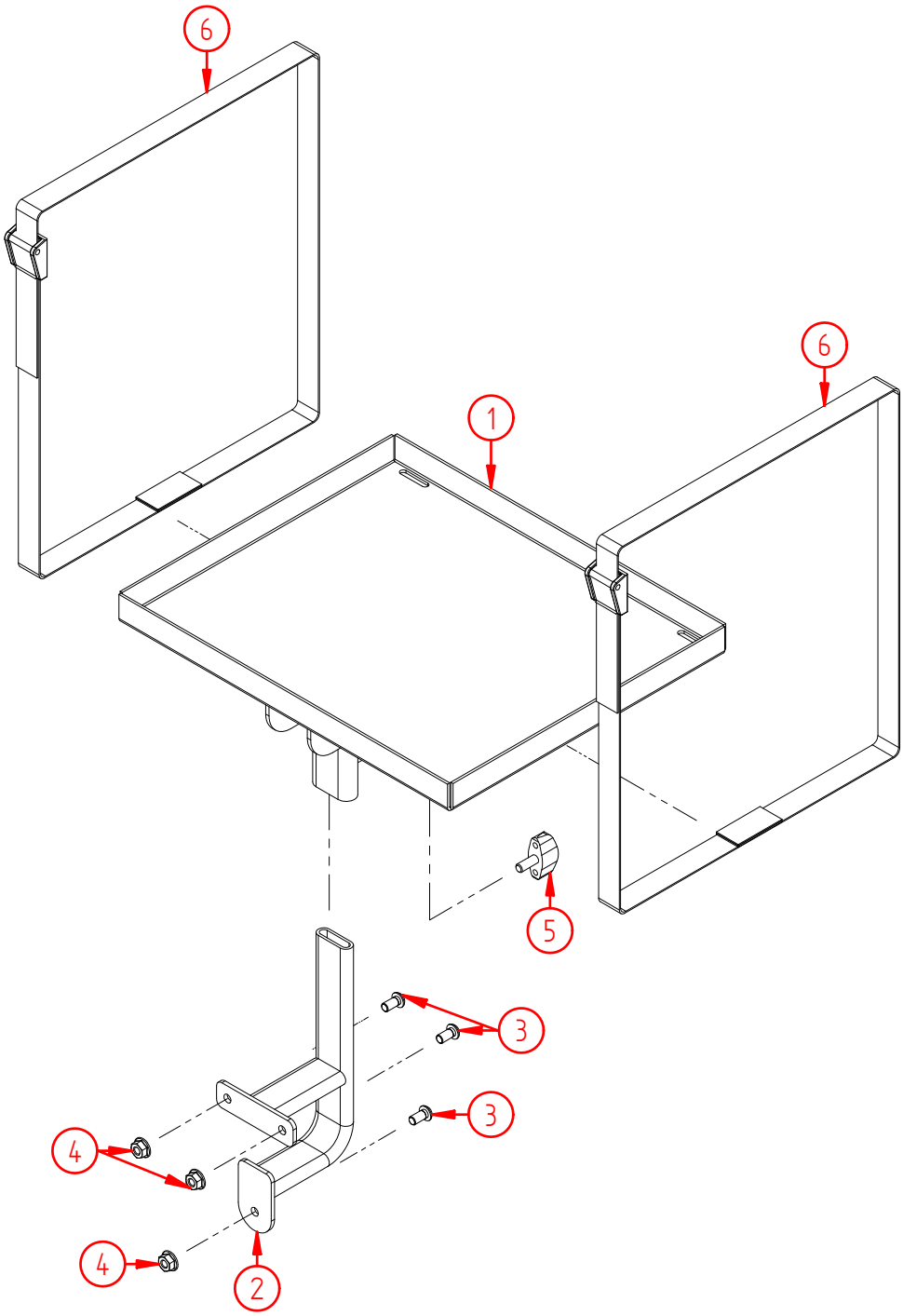

Product name:	**Platform for breathing device (B:30cm D:25cm), F/J**
Product no:	**HP20071143**
Product reference:	**Balder F/L**
Manufacturer:	Etac AS, www.etac.com
Revision:	**01.01.07**

Pos no.	Part no.	Qty	Description
1	11738	1	Platform, breathing device, Balder F/J
2	11739	1	Bracket, breathing device platform, Balder F/J
3	1312	3	Screw, hexagon socket pan head M6x12 ISO7380 Elzink 10,9
4	1039	3	Nut, tensilock M6 DIN 6923 Goldfinish 8,8
5	000532	1	Locking lever M6x15
6	11740	2	Strap w/ lock 20x1200mm

Part no.	Qty	Description
.	.	.
.	.	.
.	.	.
.	.	.

Product name:	**Panel w/toggleswitch for extrafunction w/bracket**
Product no:	**HP20071144**
Product reference:	**Balder F/L**
Manufacturer:	Etac AS, www.etac.com
Revision:	**01.01.07**

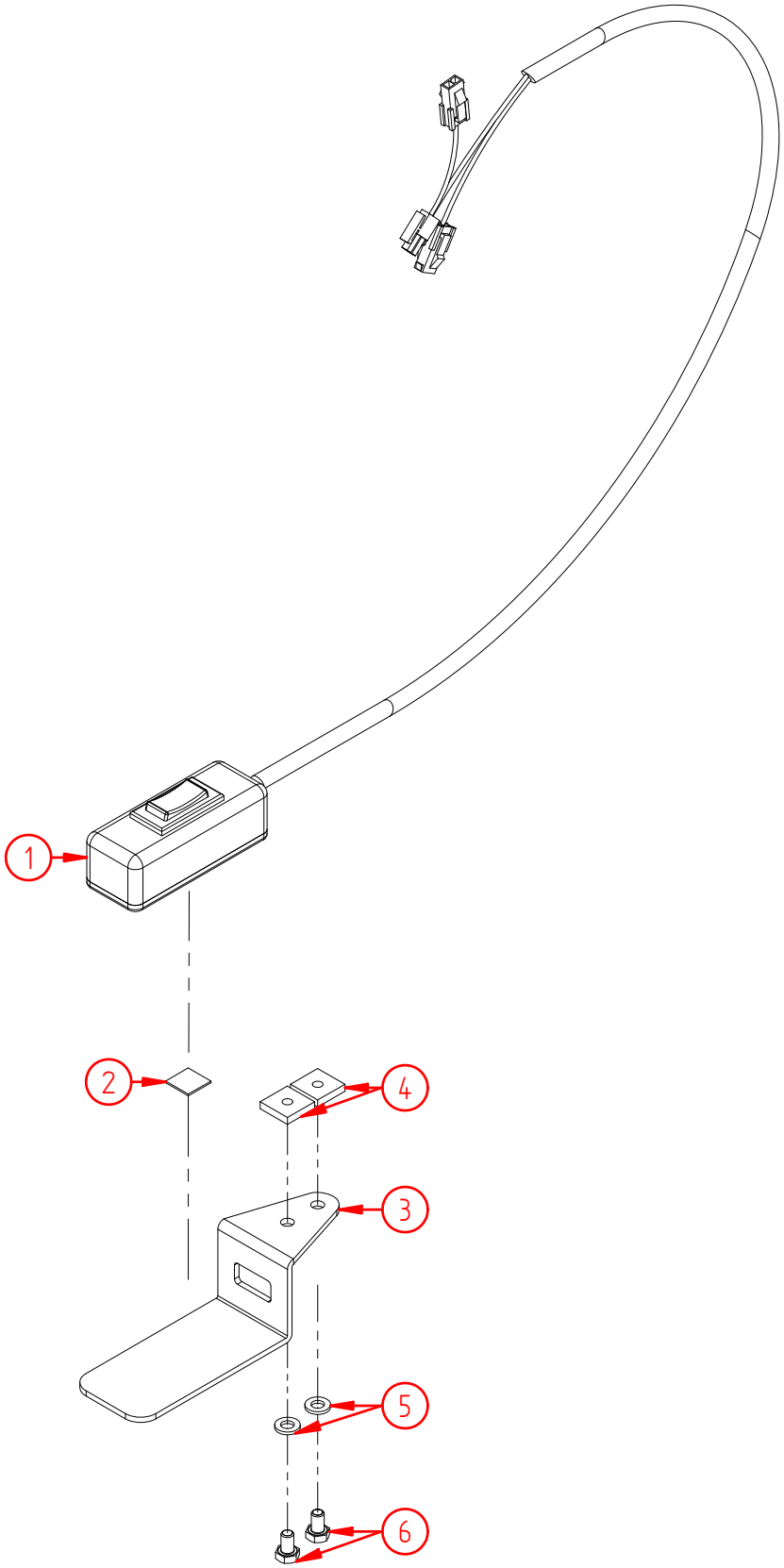

Product name:	**Panel w/toggleswitch for extrafunction w/bracket**
Product no:	**HP20071144**
Product reference:	**Balder F/L**
Manufacturer:	Etac AS, www.etac.com
Revision:	**01.01.07**

Pos no.	Part no.	Qty	Description
1	11151	1	Panel with toggleswitch for extrafunction Balder
2	1367	1	Velcro for fixation (L: 65mm)
3	1356	1	Bracket, panel 35x90mm, front armrest F/L/J
4	1276	2	Nut 18x18x4xM6, square, steel
5	1311	2	Washer M6 DIN 125 Elzink
6	2766	2	Screw, hexagon M6x10 DIN 933 Elzink 8,8

Part no.	Qty	Description
.	.	.
.	.	.
.	.	.
.	.	.

Product name:	**Pushhandle, seat back, Balder F/L/J240**
Product no:	**HP20071145**
Product reference:	**Balder F/L/J240**
Manufacturer:	Etac AS, www.etac.com
Revision:	**01.01.07**

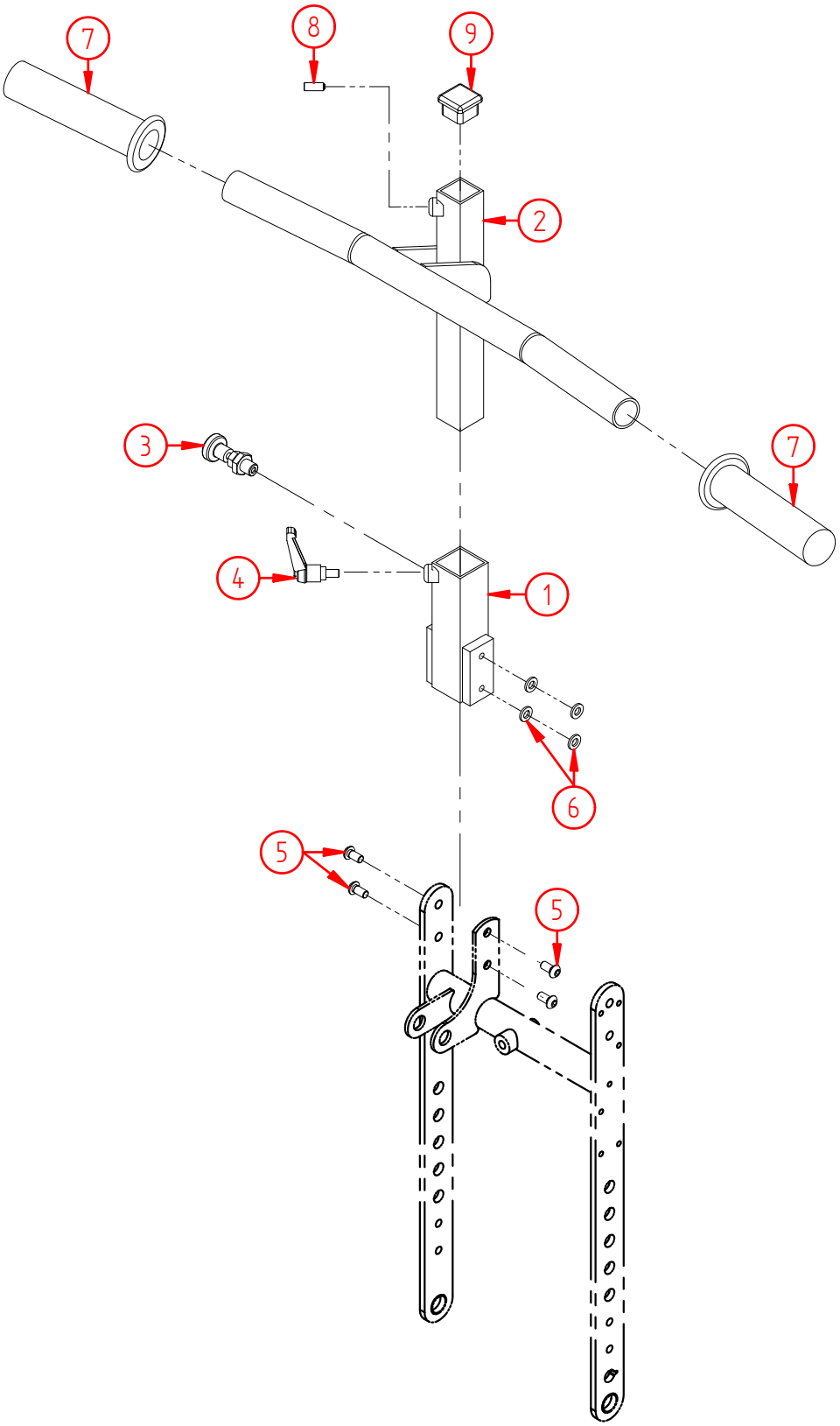

Product name:	**Pushhandle, seat back, Balder F/L/J240**
Product no:	**HP20071145**
Product reference:	**Balder F/L/J240**
Manufacturer:	Etac AS, www.etac.com
Revision:	**01.01.07**

Pos no.	Part no.	Qty	Description
1	11070	1	Mounting bracket w/release button, F/L/J240
2	11069	1	Pushandle, backframe, Balder F/L/J240
3	4506	1	Fixation bolt M10x1,0
4	000294	1	Locking handle, M6x16, APS
5	1312	4	Screw, hexagon socket pan head M6x12 ISO7380 Elzink 10,9
6	1311	4	Washer M6 DIN 125 Elzink
7	11068	2	Ferrule black for Ø25 pipe
8	4215	1	Screw, hexagon set, M6x16 DIN 916 Unplated
9	2057	1	Ribbed Plastic Insert

Part no.	Qty	Description
.	.	.
.	.	.
.	.	.
.	.	.

Product name:	**Headrest, fastner, R82 Goose neck**
Product no:	**HP20071332**
Product reference:	**Balder F/L/J**
Manufacturer:	**Etac AS www.etac.com**
Revision:	**06.09.2007**

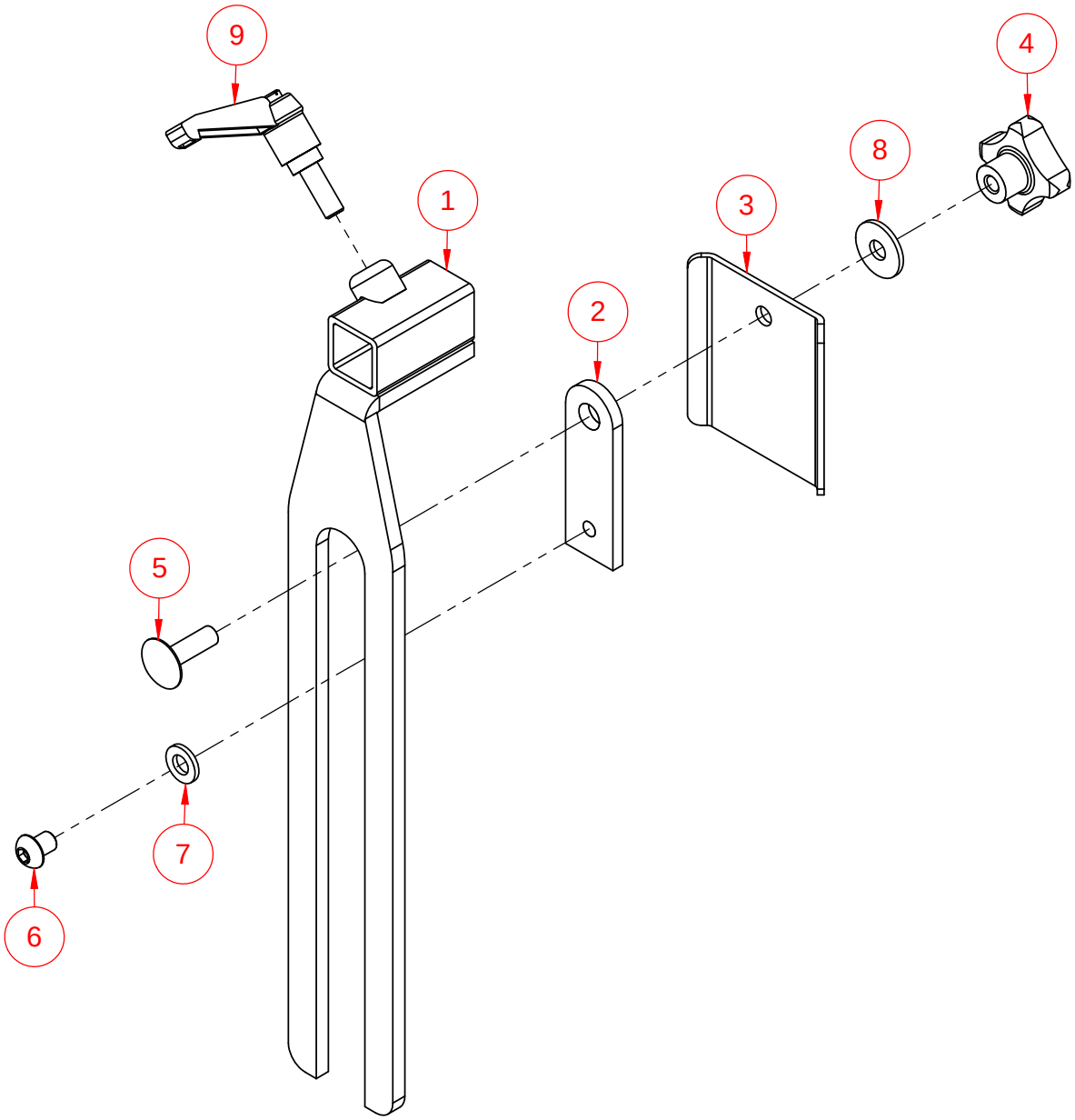

Product name:	**Headrest, fastner, R82 Goose neck**
Product no:	**HP20071332**
Product reference:	**Balder F/L/J**
Manufacturer:	**Etac AS www.etac.com**
Revision:	**06.09.2007**

Pos no.	Part no.	Qty	Description
1	12057	1	Slidebracket, headrest, R82 Goose neck
2	9944	1	Slideplate, headrest, Comfort 1-3, Junior 240
3	9945	1	Steeringplate, headrest, Comfort 1-3, Junior 240
4	9952	1	Lever, M6 internal thread, 4-arms
5	9947	1	Screw, locking w/nut, M6x20 DIN 603
6	1212	1	Screw, hexagon socket pan head M6x8 ISO7380 Elzink 8,8
7	1311	1	Washer M6 DIN 125 Elzink
8	1338	1	Washer M6x20 DIN 522 Elzink
9	000294	1	Locking handle, M6x16, APS

Product name:	**Headrest, fastner, R82 Turtle bar**
Product no:	**HP20071333**
Product reference:	**Balder F/L/J**
Manufacturer:	**Etac AS www.etac.com**
Revision:	**13.11.2007**

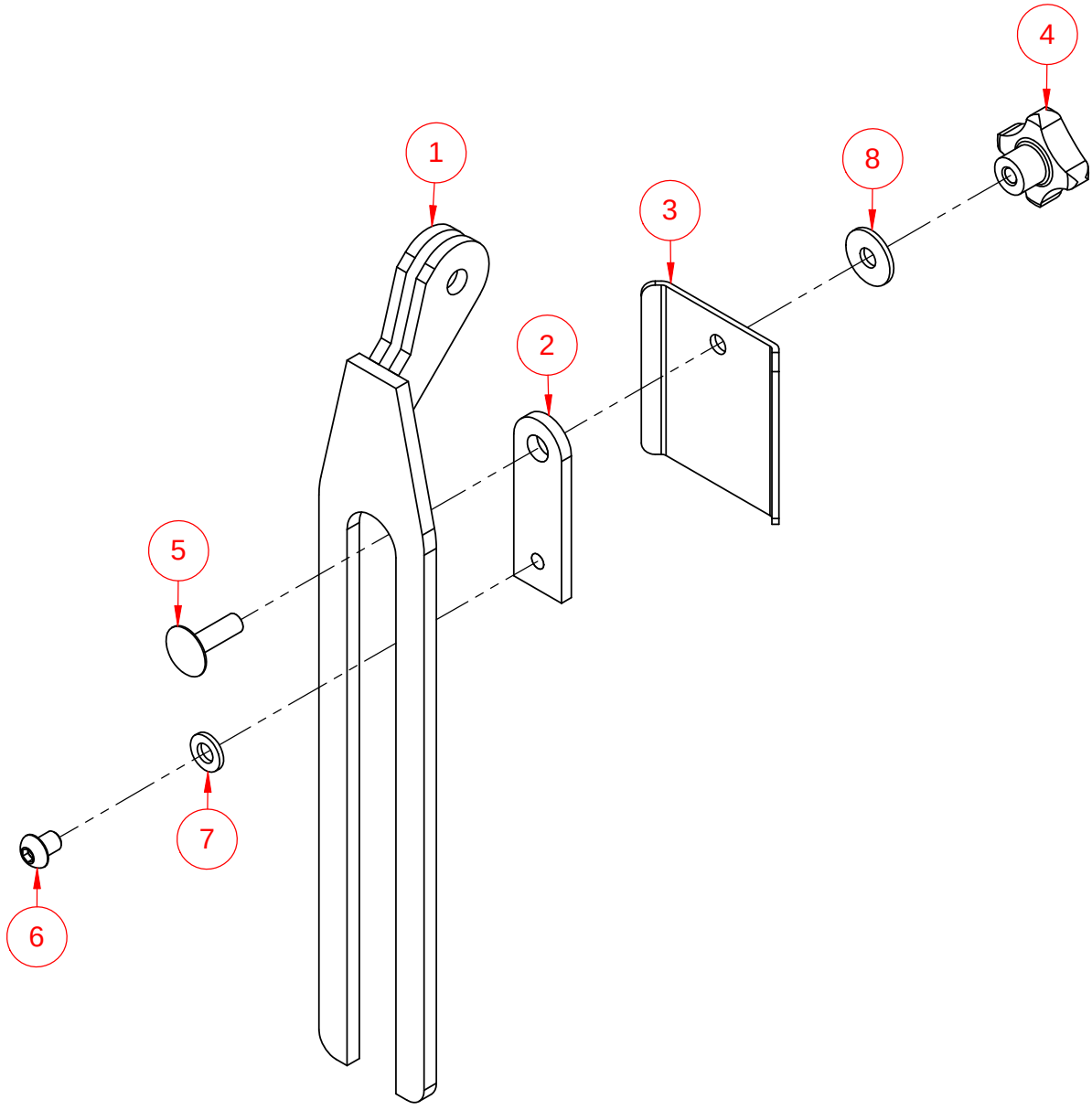

Product name:	**Headrest, fastner, R82 Turtle bar**
Product no:	**HP20071333**
Product reference:	**Balder F/L/J**
Manufacturer:	**Etac AS www.etac.com**
Revision:	**13.11.2007**

Pos no.	Part no.	Qty	Description
1	12058	1	Slidebracket, headrest, R82 turtle bar
2	9944	1	Slideplate, headrest, Comfort 1-3, Junior 240
3	9945	1	Steeringplate, headrest, Comfort 1-3, Junior 240
4	9952	1	Lever, M6 internal thread, 4-arms
5	9947	1	Screw, locking w/nut, M6x20 DIN 603
6	1212	1	Screw, hexagon socket pan head M6x8 ISO7380 Elzink 8,8
7	1311	1	Washer M6 DIN 125 Elzink
8	1338	1	Washer M6x20 DIN 522 Elzink